PORTABLE GAUGING TAPES

FOR FAST, ACCURATE MEASUREMENT OF ULLAGE, INTERFACE AND TEMPERATURE.

Trimode® triple-function tape (ullage/interface/temperature) shown.* U/I & Temperature-only models also available.

*With "MB" storage tube

MMC

SERVING YOU AROUND THE WORLD

MMC RGT 0199

MMC INTERNATIONAL CORP.

OPERATING AND MAINTENANCE INSTRUCTIONS

INTRINSICALLY SAFE

TRIPLE FUNCTION GAUGING TAPE

FOR RESTRICTED APPLICATIONS

LIQUID MEASURE OF ULLAGE, OIL/WATER AND TEMPERATURE

MODEL D-2401-2

TECHNICAL APPROVED BY:

FACTORY MUTUAL AND BASEEFA FOR
CLASS I, DIVISION I, GROUPS C & D

AND

LLOYD'S REGISTER AND BUREAU VERITAS "MED" APPROVED

IN ACCORDANCE WITH IMO RESOLUTION MEPC.5 (XIII)
FOR OIL/WATER DETECTION

MMC INTERNATIONAL CORP
60 INIP DRIVE
INWOOD, NEW YORK 11096

AUG 2006

DRAWING FILE NO. A-2401-60

TABLE OF CONTENTS

	PAGE NUMBER
NOTICES	i
I. GENERAL	
1.0 SPECIFICATIONS	1
1.1 LINEAR ACCURACY SPECIFICATIONS	2
1.2 SPECIAL FEATURES	3
II. INTRODUCTION	4
III. THEORY OF OPERATION	5
IV. REQUIRED CONDITIONS AND RECOMMENDATIONS FOR SAFE USAGE	
4.1 REQUIRED CONDITIONS	7
4.2 RECOMMENDED SAFE USAGE CONDITIONS	7
V. OPERATION	
5.1 FAMILIARIZATION WITH OPERATING CONTROLS AND FEATURES LOCATED ON THE TAPE REEL HUB COVER PANEL	8
5.2 ULLAGE/INTERFACE MEASUREMENTS	8
5.3 TEMPERATURE MEASUREMENT PROCEDURE	10
VI. CARE AND MAINTENANCE	11
VII. CALIBRATION PROCEDURE	
7.1 ULLAGE AND INTERFACE	12
7.2 TEMPERATURE SENSOR CALIBRATION	12
VIII. GAUGING TAPE REPLACEMENT	14
IX. HUB COVER AND P. C. BOARD REPLACEMENT	15
X. FAULT FINDING	16
XI. APPENDIX	18
XII. LIST OF DRAWINGS	45

NOTICE TO ALL EQUIPMENT USERS

If your gauging device has been equipped with an all Stainless Steel Triple Function Sensor (Material Type 316SS).

The triple functions of this sensor are to detect cargo surface level, **Ullage**, the **Interface** between two immiscible products such as oil and water, and cargo **Temperature**.

The normal order of the gauging device, response to the products "Ullage level", is a steady horn tone. The normal response to an "Interface level", ("i.e." between a non-conducting and a electrically conducting product such as a petroleum product and water, is a "**steady**" tone changing to a "beeping" tone, at the interface level.

A special note to our chemical customers, is the fact that some chemical cargoes may be inherently conductive.

Therefore, at the surface of a conductive product's Ullage level, a "**beeping**" tone will be the normal response.

As a further note to the above, the change in detection of a non-conductive product Ullage level as a steady tone to that of a conductive product's ullage "beeping" tone, it is not to conclude that the sensor is malfunctioning.

The all stainless steel Triple Function sensor is IMO Resolution MEPC.5 (XIII) approved, and therefore also meets the International requirements of a petroleum carrier, or a dual classed chemical / petroleum carrier.

We hope that this sensor performs satisfactorily for all your applications and we would appreciate any return comments you may have concerning its response to various products.

Best Regards,

MMC International Corp.

http://www.ocean-automation.com
info@ocean-automation.com

SECTION I

I. GENERAL

1.0 SPECIFICATIONS:

Display Readable Temperature Range . . . . . . *Reading Limit Due to 3-1/2 Digit LCD Display on °F Range.	°F = -40° to 199.9°* °C = -40° to 150.0°
Guaranteed Temperature Calibration Range . . . . . . (and 0°C to 88°C)	32°F to 190°F
Accuracy Over Calibration Range	±0.5°F (±0.2°C)
Accuracy Linear Measurements	±1/8" (±3.0MM), Plus ±0.01% of Total Tape Length, worst case
Minimum Detectable Tank Bottom Liquid Level	3/8" (10MM)
Minimum Detectable Floating Product Level	1/8" (3MM)
Batteries for Intrinsically Safe Operation Only (supplied)	9 Volt Eveready #522 or Duracell MN1604
Battery Drain (Temperature Mode)	1.3 ma (In Air) 2.6 ma (In Fluid)
Display	3-1/2 Digit Liquid Crystal Display 1/2" Character Height
Operating Temperature Limit of Liquid Crystal Display, Ambient Conditions	-40°F to 176°F -40°C to 80°C
Storage Temperature Limits	-67°F to 185°F -55°C to 85°C
Available Tape Length - Single Face Scale	50 FT or 15 Meters 75 FT or 25 Meters 100 FT or 30 Meters 100 FT (10ths & 100ths) 120 FT (37 Meters)
Hazardous Environments	Certified Intrinsically Safe BASEEFA and Factory Mutual Gas Groups C&D

http://www.ocean-automation.com
info@ocean-automation.com

1.1 LINEAR ACCURACY SPECIFICATION:

MMC PORTABLE ELECTRONIC GAUGING TAPE
STANDARD PRODUCTION
LINEAR MEASUREMENT ACCURACY

Applicable Equipment:	MMC Models D-2401-2 (Trimode), D-2401-2UI (Ullage/Interface, D-2401-2UT (Ullage/Temperature)
Tape Lengths:	50 FT., 75 FT., 100 FT, 120 FT and 15 Meter, 25 Meter, 30 Meter 37 Meter
Basic Gauging Tape Style:	Steel, 0.375 wide x 0.006 thick, yellow or white faced, black and red graduation markings. Manufactured in accordance with Federal Specification GGG-T-106F.
System Linear Accuracy at 68°F:	English Reading, ±1/8" of reading plus ± 0.01% of total tape length. Metric Reading, ±3MM of reading plus +/- 0.01% of total tape length.

GENERAL STATEMENT OF LINEAR ACCURACY

MMC warrants that the above listed, newly produced equipment models, incorporating the listed basic gauging tape style and lengths, will perform to the stated system accuracy.

Certification of accuracy for new equipment is available at extra cost. Certification cost to standards of accuracy more precise than the stated system accuracy will be quoted upon request.

http://www.ocean-automation.com
info@ocean-automation.com

1.2 SPECIAL FEATURES:

Conductive Tape Surface to Drain Off any Static Charge

Grounding Cable with Heavy Alligator Clamp

Watertight Electronics Construction with Sealed Switches

All Stainless Steel Fasteners

Nylon Coated Aluminum Reel Housing for Light Weight Portability

Low Battery Display Indicator

High Daylight Visibility with Liquid Crystal Display

Push-button Night Light

Rapid Multiple Temperature Measurements

IMO approved for oil/water interface Detection

Full stow " Pop-up" button spring loaded Tape Wiper housing Gas Seal

SECTION II

2.0 INTRODUCTION

2.1 The MMC Tri-Mode portable ullage, temperature and interface tape described herein incorporates extremely accurate instrumentation to provide three vital petroleum and other liquid tank measurements.

* Measurement of surface ullage level of oil or other fluids to an accuracy and repeat-ability of ±1/8 inch.

* Determination of the exact location of the ullage level of the interface layer exists when an oil-water mixture is contained within the same vessel.

* Measurement in either Degrees F or Degrees C of the temperature of the fluid within a vessel, at any or several desired ullage levels, in rapid succession. Measurement is given to the nearest 0.1 degree and is accurate to ±0.2°F over the calibrated temperature ranges given in the specifications listed in Section I.

2.2 The MMC system utilizes a sensor suspended at the end of a fluoropolymer covered \ gauging tape wound on a reel assembly, The plastic covered steel gauging tape contains two isolated side conductors to carry the signal and power to the electronic circuit within the sensor barrel with the steel tape provides the ground return. The plastic surface of the tape has been treated to make it sufficiently conductive to prevent the build-up of static charges. Temperature indication is provided by a large digital liquid crystal display (LCD), housed within a sealed reel driving assembly.

2.3 Ullage and interface detection is provided by an audible signal obtained from a horn in the reel driving hub, when the bottom "U" gap in the sonic sensor is immersed in fluid. The audible signal heard, will be a continuous tone in a non-conductive fluid such as oil, gasoline, kerosene, etc., but will change to an interrupted tone when immersed in and fluid which is electrically conductive, such as water.

2.4 The system is certified as intrinsically safe for electrical equipment in hazardous atmospheres by Factory Mutual, BASEEFA /SIRA, CSA, and SAA.

2.5 The triple function temperature, interface, and ullage sensor is powered by a single 9 volt battery contained within the hub assembly. Battery drain is extremely low, (Approximately 1-1/4 Mili-amperes in either the ullage, interface or the temperature mode), insuring very long operation, without battery replacement. Low battery warning is provided at the upper left corner of the temperature display LCD, when the battery voltage has dropped to a level that would, with further operation, cause excessive errors in temperature readings.

SECTION III

3.0. THEORY OF OPERATION

3.1 Drawing D-2562-1FRL illustrates the main components of the Ullage, Temperature and Interface system. A tape reel contains the calibrated tape. The reel crank on the driving hub is used by the operator to raise and lower the sensing head assembly which is attached to the reel via the tape. Before lowering or raising the tape, the reel brass thumb screw lock must be unlocked.

3.2 The sensor head assembly contains two piezo-electric crystals, a pair of interface or conductivity pins, a temperature sensor, located in one of the conductivity pins and electronic circuit board. The sensor is connected electrically to the driving hub electronics by the two wires encased in the gauging tape plastic jacket, which covers and hermetically seals these wires and centers graduated metallic gauging tape. The metallic tape is used as a ground return conductor, which when including the two wires straddling it, form a rectangular three conductor transmission cable.

3.3 The electronic circuits in the hub assembly are comprised of a LCD digital display which provides temperature readings when the system is in the temperature mode; an analog to digital converter; a power on-off switch; a mode switch which permits operator to select the temperature mode or ullage/interface mode; a night light switch and ancillary electronic parts all assembled on a printed circuit board. A 9 volt battery power source and audio horn are located within the tape reel hub assembly below the P.C. board of the modular hub cover assembly.

3.4 When the system is placed in the ullage/interface mode, and as the sensor is immersed in a non-conductive fluid such as oil, a sonic signal originated by the sensor head circuits freely crosses the sensor gap and is detected, amplified and then transmission tape to the hub electronics board, which in turn drives a horn in the turning drum assembly. A high pitched continuous audible signal is then emitted. When the sonic sensor is in air, the sonic signal does not cross the sensor gap and therefore, the horn is silent.

3.5 When the sonic sensor is immersed in a conductive fluid, such as the water layer side of an oil/water interface operation is as above except that the conductivity pins within the sensor gap now permit a minute current to flow between the pins. This current flow is detected by the sensor electronic circuitry with the sensor housing and suitability conditioned to cause the sonic signal to be periodically interrupted, yielding a “beeping” tone for operator identification.

3.6 When the system is placed in the temperature mode the ullage and interface circuits within the sensor barrel are de-energized, also disengaging the audio signals associated with the ullage/interface mode. The integrated circuit temperature sensor housed within the grounded interface pin now functions as an extremely accurate linear temperature to current transducer. As the temperature at the sensor rises, so does the temperature sensor current. By passing the temperature sensor current via the transmission tape, though the electronic component network, with the turning drum, input to an A to D converter is caused to vary linearly with temperature. Span control (R18) is adjusted to provide a fixed reference voltage, to scale for either a Centigrade or Fahrenheit reading device. Coded digital output from the A to D converter to the LCD Display is used to prove accurate and fast temperature readings.

http://www.ocean-automation.com
info@ocean-automation.com

The two potentiometer controls, R13 and R18, perform as a two point temperature calibration adjustment.

A complete temperature calibration procedure is later described in this manual. (See Section VIII).

Temperature re-calibration is recommended at yearly intervals. Please note that units returned

Temperature Calibration during standard or extended warranty periods are not covered by warranty statement.

SECTION IV

4.0 REQUIRED CONDITION AND RECOMMENDATION FOR SAFE USAGE

The attention of the user of this apparatus is drawn to the possible hazards of ullage, interface and temperature measurements within flammable liquids, which are also known to be generators of static electricity.

Adhering to the specific safety directives of your company, is the responsibility of the user.

The following is a general guidance to safe usage, drawn from the advice and experience of various industry sources.

The specific safety standards or directives of your company are to be strictly adhered to, with the general guidance given here being regarded as only a supplement to existing and established operating safety procedures.

4.1 REQUIRED CONDITION

This apparatus must be earthed (grounded) to the liquid tank containment vessel or tank, before and during introduction into the vessel. The earthed conductor must not be disconnected until the apparatus is completely withdrawn from the vessel being gauged. A suitable grounding cable is provided as part of the gauging unit. Proper grounding of this cable is the responsibility of the user.

4.2 RECOMMENDED SAFE USAGE CONDITIONS FOR THE TRIPLE FUNCTION GAUGING TAPE:

4.2.1 The grounding of the unit, and adhering to the specific company safety standards or directives, is the sole responsibility of the operator.

4.2.2 Sensor entry into tanks or vessel immediately following a tank filling or loading operation of known static accumulator type petroleum products or other such flammable liquids, **should not** be attempted until, at least a period of **30 minutes** has elapsed since the cessation of filling.

4.2.3 Clean oil distillates are in general, known to be accumulators of static electricity due to their low conductivity (I.E., less than 100 Pica Semians/Meter) and therefore may require relaxation periods of longer than 30 minutes before gauging is attempted.

4.2.4 The foregoing does not consider the use of anti-static additives to clean oils, as generally easing the need for proper precaution, unless actual and specific product testing has shown the product to have conductivity levels which eliminate the danger of static electric charging.

4.2.5 Sensor entry into tanks or vessels that have been water washed and which previously contained, or still partially contain petroleum products is not recommended unless a sounding pipe is provided, and approved for such use, or at least a period of five hours has elapsed since the completion of the working operation.

http://www.ocean-automation.com
info@ocean-automation.com

SECTION V

5.0 OPERATION

5.1 FAMILIARIZATION WITH OPERATING CONTROLS AND FEATURES LOCATED ON THE TAPE REEL HUB COVER PANEL:

5.1.1 Turn on power by momentarily depressing the "Off/On" push-button switch (1) located at left of panel. The display should read 1XX.X* indicating that the system is in the Ullage/Interface mode.

5.1.2 Looking at the top left hand corner of the LCD display notice if the symbol "Lo Bat" appears. If the symbol is displayed, the battery voltage is low and the battery should be replaced (see Section VII Paragraph 7.5). Always replace the battery if "LO BAT" appears even though the digital display turns on. Temperature readings with a low voltage battery (below 7.0 Volts) are unreliable.

5.1.3 Once again, momentarily depress the power "On/Off" switch. Note that the display turns off. Always turn power off when the system is not in use to prolong battery life.

Depress the "Off/On" switch once more. Display turns on and reads 1XX.X* indicating the Ullage/Interface mode.

*NOTE: Due to an inherent digital uncertainty of the A to D converter, some digital displays, whenever in the Ullage/Interface mode, will read 00.0 instead of 1XX.XX.

5.1.4 Now momentarily depress the "Mode" switch at the right of the panel. The display should now switch to the temperature mode as indicated by a reading on on the display indicative of the temperature of the sensor tip.

Once again depress the "Mode" switch and note that the display reads 1XX.X* (Ullage/Interface Mode). Depressing the "Mode" switch alternately changes the function from temperature to Ullage/Interface and vice versa. Depressing the power "Off/On" switch alternately turns power off or on regardless of which mode was in operation. However, when power is switched on again the system will always come on in the Ullage/Interface mode.

5.1.5 Depress the night light switch (3) at upper center of panel when it is too dark to see the display. The display background will illuminate and the reading should now be discernible.

5.2 ULLAGE/INTERFACE MEASUREMENTS:

5.2.1 If power is off, depress power "Off/On" push-button switch. The system comes on in Ullage/Interface mode (display reads 1XX.X).

5.2.2 If the power was on and the system is in temperature mode, depress the "Mode" switch at right of panel to alter function to Ullage/Interface

http://www.ocean-automation.com
info@ocean-automation.com

5.2.3 Make sure "LO BAT" Does not show at left upper corner of display

5.2.4 After grounding the assembly, insert the barrel of the gauging into the valve. Un-lock the tape reel lock, by rotating the brass lock thumbscrew counterclockwise turning position hub seat. Grasp the knurled reel crank hand and lower the sensor head tape assembly, which contains the sonic sensor, into the tank. Always exert a restraining force to prevent the sensor from descending too rapidly or free falling.

CAUTION!

Under no circumstances should the reel and tape be permitted to unwind without restraint. Permanent damage may be incurred to the sensor head or to the calibrated tape if the head is permitted to fall freely.

5.2.5 Lower the sensor head slowly until a tone steady is heard. If the surface of the fluids is oil or other non-conductive fluid, a continuous audible tone will be heard. If the surface of fluid is water or other conductive fluid, the audible tone heard, will be a "beeping" tone.

5.2.6 Define measurement by raising the sensor head until the sound just ceases. Lower until sound is just heard again, to refine ullage level.

5.2.7 Place gauging tape against ullage referenced point and read ullage on tape Note this reading as the surface liquid ullage level.

5.2.8 To find the oil-water interface point, continue to lower the sensor into fluid, noting that the audible tone is continuous. When the audible signal changes to a "Beeping" tone, the sensor has entered the water column underneath the oil.

5.2.9 Raise the sensor very slowly until the tone once again becomes continuous. Repeat if necessary to refine water entry point (Interface level).

5.2.10 Again, read the ullage on the tape. By subtracting the first reading obtained (step 7) from this reading, the total product depth is thus determined. By subtracting the second water level ullage from the maximum tank depth, water level innage is determined.

5.2.11 When the measurement is completed, place the spring loaded wiper knob in the "On" position while rewinding the tape until sensor is stored with in the vapor valve entry barrel. **Do not close the vapor valve until the fully "stowed" position is confirmed,** by noting that yellow pop-up button on top of the wiper housing is "up"

5.2.12 Lock the reel by rotation the crank/reel lock thumbscrew down position (parallel to hub).

Depress power "Off/On" switch to conserve battery power.

5.2.13 Close the vapor valve, disconnect the valve securing cap, remove the gauging unit, disconnect the grounding cable. Replace the vapor valve cap.

http://www.ocean-automation.com
info@ocean-automation.com

5.3 TEMPERATURE MEASUREMENT PROCEDURE

5.3.1 If power is off, turn unit on by depressing "Off/On" push-button switch. Unit comes on in Ullage/Interface mode. Depress "Mode" push-button switch to select temperature.

5.3.2 If unit was on and in Ullage/Interface mode, simply press the "Mode" push-button to select temperature.

5.3.3 Make sure "LO BAT" does not show at left upper corner of display. If "LO BAT" appears, replace battery even though the digital display turns on. The display may continue to operate even though the battery voltage is below normal. Temperature reading however, may be in error.

5.3.4 Ground the assembly, release the turn handle reel lock. Lower the sensing sensor to the deepest reading desired. Make sure to exert restraining force while lowering.

5.3.5 When the desired temperature ullage level is reached, allow the sensor to at this point for at least two (2) minutes. Then joggle the sensing sensor up and down, approximately 6" above and below the desired measurement level until the displayed temperature reading settles. Record this reading. For heavy crude oil products, the joggling procedure is a necessity to insure accurate readings. The viscous nature and low thermal conductivity properties of these petroleum products, makes the joggling procedure a necessity to insure accurate temperature in a minimum amount of time.

5.3.6 Raise the sensor to the next ullage level to be measured. Repeat step 6.3.5. Continue raising sensor to all levels at which readings are desired.

5.3.7 When the measurements are complete, push "Off/On" button to turn off and conserve battery power. Rewind the tape into the carriage reel assembly. Wipe the tape as it is rewound by placing the spring loaded wiper in the "On" position.

5.3.8 Lock the reel by rotation reel lock crank down, position. Follow the same final procedure as described in step 5.2.13 above.

http://www.ocean-automation.com
info@ocean-automation.com

SECTION VI

6.0 CARE AND MAINTENANCE

Proper care and maintenance should be practiced to maintain long trouble free and accurate service and to maximize battery life, as follows:

6.1 When not in use, make sure power is off as evidenced by display being extinguished.

6.2 Store sensor head assembly in the fully wound position and store in a dry location. Do not allow the instrument to remain for long periods in direct sunlight, or store in temperature above 125° F, or in temperature below freezing. Such temperatures may damage the liquid crystal display.

6.3 Wipe excess oil or water from tape, and sensor head. Each time the sensor is raised from the tank, hold the spring loaded tape wiper switch in the "On" position.

6.4 Never permit tape and sensor head to unwind freely (control speed of descent by usage of a restraining force on crank).

6.5 **BATTERY REPLACEMENT (See Approval Label for correct type)**

The battery should be replaced whenever the "Lo Bat" symbol appears at the upper left corner of the display. If the sensor is used to obtain temperature readings when the battery is low, large errors may result. Always replace battery in a gas free atmosphere. Remove the six machine screws on the hub cover. Lift the cover with its attached P.C. Board. The battery is retained within the reel turning drum a spring clip battery holder. Remove the battery from the battery cap connector. Replace the battery with a fresh battery of the type listed on the approval label only. Take care to align the viton cover gasket, cover, and machine screw fasteners when re-assembling to tape reel hub.

http://www.ocean-automation.com
info@ocean-automation.com

7.0 CALIBRATION PROCEDURE

7.1 ULLAGE:

The ullage circuits do not require calibration in the field with proper care and handling the equipment should function indefinitely.

7.2 TEMPERATURE SENSOR CALIBRATION

The temperature sensor and its associated electronic circuitry have been accurately calibrated at the factory . Temperature Calibration by MMC is recommended at twelve-month intervals, with periodic checks being carried out as necessary between these intervals.

Before attempting any calibration, make sure that the battery is at a proper voltage level as evidenced by the fact that "Lo Bat" does not appear at the upper left corner of the display when the equipment is powered. Low battery voltage will produce errors in temperature readings. If "Lo Bat" appears on the display, check battery voltage and replace. If necessary, calibration of the temperature sensor may be accomplished as follows:

7.2.1 Use thermometers accurate to ±0.1° and preferably graduated in one-tenth degree intervals. If mercury thermometers are employed, use two separate thermometers to provide greater resolution. One to cover low temperatures cover low temperatures and the other to cover the high temperatures.

7.2.2 Remove the six machine screws on the hub cover. Lift the cover and attached P.C. Board from Hub exposing two potentiometers at back lower left of board. Lowest potentiometer, marked (R13), is the “Zero” control and the potentiometer to the left and above, marked (R18), is the “span” control. (See drawing B-2401-31).

7.2.3 Turn display on by depressing power "Off/On" button momentarily. Place system in temperature mode by depressing “Mode” switch. Display should now read temperature at sensor tip.

7.2.4 Prepare two temperature baths, a cold bath of approximately one-gallon of water, and a hot bath of approximately one gallon of water at a temperature at least 60° higher than the cold bath.

7.2.5 Place the sensor in the cold bath with thermometer and stir the bath well to equalize temperature. Keep sensor and thermometer together at approximately the same point in the bath.

7.2.6 Record: Sensor Cold Reading as = pc (as read from digital display)

Record Reference: Thermometer Cold reading as = tc

7.2.7 Repeat the above procedure in a hot bath.

7.2.8 Record: Sensor Hot Reading as = ph (as read from digital display)

Record Reference: Thermometer Hot Reading as = th

http://www.ocean-automation.com
info@ocean-automation.com

7.2.9 Calculate Zero Correction = $tc \frac{(ph - pc)}{th - tc} - pc$

7.2.10 Place sensor in cold bath. Stir and wait until sensor reading on display stabilizes. Note reading and then adjust "Zero" control potentiometer marked (R13) so that the zero correction calculated in step 8.2.9. above is added to or subtracted from the sensor reading. If the answer in step 8.2.9 above is positive, add the correction, if negative, subtract.

7.2.11 Now place thermometer in the cold bath with the sensor and stir. Now adjust the "span" potentiometer until the two reading are equal (the displayed reading, and the reading of reference thermometer).

7.2.12 Check readings in hot bath. Slight touch-up of "Span" control may be required. Normally not more than a ±0.1 degrees correction is necessary if the calculated measure "Cold" temperature procedure has been performed correctly.

The above method allows the operator to perform the calibration in one step. If desired, and particularly if the error is minor, an adjustment of zero may be performed in the cold bath to equal the thermometer reading. Then the span may be adjusted in the hot bath. However, this procedure requires repetition until both cold and hot bath readings are correct without further adjustment in either cold or hot baths.

http://www.ocean-automation.com
info@ocean-automation.com

SECTION VIII

8.0 GAUGING TAPE REPLACEMENT (With or without new sensor attached)

The gauging tape used for the Trimode restricted gauging system is similar but not inter -changeable with the gauging tapes used for closed gauging systems.

The tapes used are bright white faced steel core type, which have been encapsulated with a tefzel jacket. (Tefzel is a registered trade name of the Dupont Corporation). The tapes is terminated at the display electronics hub PCB module connection points, by soldered leads within tape reel internal core. The sensor is connected to the tape be means of a quick connect plug to the tape socket plug.

As with all tefzel coated MMC gauging tapes, the outer surfaces are factory treated to render the surfaces of the tapes anti-static properties.

The patented process to achieve the desirable anti-static condition, is not defeated by tape wiping or cleaning with standard petroleum based solvents.

Gauging tape replacement is not difficult, but requires careful attention to the travel path of tapes as it exits from the tape reel assembly, passes over the interior guide rollers, cursor pin assembly, anti-chafing rollers and on through the wiper housing .

8.1 To replace a tape, remove the machine screws from the hub cover and lay it to the side.

8.2 Remove battery from the battery holder, unplug battery cap and storage barrel by loosening cap nuts on wiper housing.

8.3 Remove round vapor seal assembly on top of the tape wiper by backing off the Allen set screws which hold it in place and place tape wiper knob in “Off” position.

8.4 Completely unreel tape and sensor head. Note that the end of the metallic tape inside the hub is grounded by a machine screw and washer. The tefzel tape cover at this point has been trimmed away to permit good ground contact. Also note that the tape’s outer conductors are spliced to two to the wires that originated at the circuit board. (Note the color of these wires so that when reassembling, the correct wire will be connected to the top and bottom tape conductors).

8.5 Detach the tape at the hub by removing the grounding machine screw and unsolder the splice connections. Pull the tape through the slot in the side of the hub and out through the tape wiper.

8.6 Attach a new tape to the hub by reversing the above procedure making sure that the tape numerals face in the same direction as the previous tape numeral faced. Make sure that the splices are well insulated (use shrink tubing) and that the grounding machine screw and washer are fastened tightly to provide a good metallic ground between center ground tape conductor and hub.

8.7 Replace battery, battery cap and hub cover. Connect old sensor to tape, if not supplied with Replacement. Rewind tape on reel.

8.8 Replace tape vapor seal assembly and sensor storage barrel.

8.9 Perform a temperature calibration in accordance with Section VII.

http://www.ocean-automation.com
info@ocean-automation.com

9.0 HUB COVER AND P.C. BOARD REPLACEMENT

To replace the turning drum hub cover and P. C. Board, follow the steps outlined below:

9.1 Remove the six machine screws from the hub cover, and extract cover, gasket and P.C. Board.

9.2 Unplug battery cap.

9.3 Unsolder wires that go to small horn (Note that these wire originate from same strip that connects battery cap).

9.4 Now carefully examine three conductor strips that originate at upper right hand corner of P.C. board. These wires may not be the same color code as the replacements hub P.C. Board and it is important that they be connected to the correct points. Note that one wire (ground) has a terminal lug attached and therefore replaces the previous wire with terminal lug.

9.5 Now make a note of the wires that go to top and bottom splices of outer tape conductors. One of these wires goes to a point on P.C. Board Labeled "+V". The other to a point on P.C. Board labeled "SIG". Note which goes to top and which goes to bottom conductor. For example: "SIG" to top connector and "+V" to bottom connector.

9.6 Unsolder spliced conductors and remove the nut ground connecting the gauging tape to the driving drum. This now completes disassembly and the old hub assembly can be put aside.

9.7 Position new hub cover and P.C. Board and solder to horn and insulate the two free wires originating from the battery cap strip line. The polarity of these two wires is not important.

9.8 Reconnect ground wire with terminal lug to driving drum ground post and replace and tighten nut.

9.9 Re-solder and insulate “+V” and "SIG" wire to outer tape conductors taking careful notice of where they originated. (see Step 10.5 above)

9.10 Replace battery and connect battery cap.

9.11 Re-assemble hub cover and attached P. C. Board with six machine screws being careful to line up neoprene gasket.

9.12 Perform temperature calibration in accordance with Section VII.

.

10.0 FAULT FINDING (SEE DRAWING B-2401-31)

The following section covers only simple faults that may occur. No attempt has been made in this section to cover highly technical faults.

PROBLEM NO. 1: Unit does not turn on when power "OFF/ON" switch is depressed.

PROCEDURE & EXPLANATION: If unit does not turn on at all, check battery voltage using a voltmeter. If battery voltage is lower than four (4) volts because units has been accidentally stored for a lengthy period with power on the voltage is too low to illuminate display. Replace battery. (See Section VII Paragraph 7.5). If battery is okay, check power "ON/OFF" switch using an OHM meter. Switch should normal show an open circuit. When depressed OHM meter reading should be less than 2 Ohms. If switch is okay integrated circuit chip is probably at fault. Return to factory or service center for repair.

PROBLEM NO. 2: Unit stays on all the time, even though "OFF/ON" push-button is depressed.

PROCEDURE & EXPLANATION: This symptom is usually indicative of a faulty power "OFF/ON" push-button switch. Check the switch with an Ohmmeter as explained in Problem No.1 above.

PROBLEM NO. 3: Unit turns on and off, however, when "Mode" switch is depressed system does not switch to temperature it stays in Ullage/Interface mode always.

PROCEDURE & EXPLANATION: Use OHM meter to make sure "Mode" switch is normally open and when depressed is closed. If switch is faulty replace. If switch check out okay, problem is probably an integrated circuit chip. Return to factory for repair.

PROBLEM NO. 4: Temperature readings are erroneous

PROCEDURE & EXPLANATION:

A.) When display is on does "Lo Bat" appear at upper left corner? If so, replace battery with a new battery.

B.) If "Lo Bat" does not appear and display contrast in temperature mode is not good and in particular the decimal point is very faint or not visible, check battery voltage using voltmeter. If voltage has fallen below 5.0 "Lo Bat" may not appear. Usually, under these conditions the temperature readings will show extreme errors.

C.) If battery checks okay, it is possible that the temperature sensor in the sensing head may have been damaged by dropping unit or unit may be out of calibration, due to severe exposure or abuse.

D) Determine if sensor is still useful by following the calibration procedure given is Section VII.

E) If fault not corrected, return to MMC for repair. Sensor or integrated circuit chip may require replacement.

PROBLEM NO. 5: Liquid Crystal Display (LCD) does not function properly one or more segments stay on or off all the time producing strange figures.

PROCEDURE & EXPLANATION: Display contact may be corroded or dirty. Remove hub cover and associated P.C. Board by first removing six machine screws. Remove the three push-button switches and seal boot fasteners. P.C. board and associated display may now be separated from coverplate. Remove (LCD) display bezel (see DWG. B-2401-31) by first removing two machine screws and nuts. Carefully lift bezel and liquid crystal display from blue connector. Make sure that the long thin elastomer contact strips that fit into the top and bottom horizontals slots of the connector are not lost. Remove connector with associated contact strips exposing P.C. Board contacts. Use a good non-oil contact cleaner to clean P.C. Board contacts. If corroded or dirty, wipe contact (bottom side only) with cotton swab wetted with alcohol, being careful not to saturate LCD with fluid.

CAUTION !

Do not spray contact cleaner on LCD display or permanent damage may be incurred. Re-assemble in reverse order making sure elastomer contact strips are inserted properly in blue connector horizontal slots. Note that blue connector bottom pins fit into mating hose on P.C. Board for proper alignment. If above procedure does not cure problem then either display or integrated circuit A/D converter is at fault. Spare display can be substituted to isolate problem. Order from MMC together with new connector.

PROBLEM NO. 6: Display is damaged, permanently discolored broken.

PROCEDURE & EXPLANATION: Order new display and connector from MMC and follow procedure given in Problem No. 5 to replace.

PROBLEM NO. 7: Unit operates properly in temperature mode, however, when placed in ullage mode, horn does not sound in oil or in water, or sound is extremely weak.

PROCEDURE & EXPLANATION: Sonic sensor has probably been damaged by being dropped and replacement may be required. Check unit in a container of clean lube oil, and then in a container of water. If sensor does not respond per operating procedure, then sensor replacement is probably necessary. Return to factory.

http://www.ocean-automation.com
info@ocean-automation.com

APPENDIX

	Page Number
A. MMC Warranty Statement	19
B. EC-Type Examination Certificate	20-23
C. Factory Mutual Approval Agreement, Certificate No. OFOH1.AX, Dated September 6, 1983	24
D. Lloyd's Register, Certificate of Type Approval, Type D-2401-2, D-2401-2UI, D-2401-2UT IMO Resolution MEPC.5XIII, Certificate No. SASP020006,	25
E. Lloyd's Register, Certificate of Type Approval, Type D-2401-2S, D-2401-2UIS, D-2401-2UTS IMO Resolution MEPC.5XIII, Certificate No. SASP020007	26
F. BV European Council Directive 96/98 EC on Marine Equipment (M.E.D) EC Type Certificate.	27
H. BV European Council Directive 96/98 EC on Marine Equipment, as amended for Module D production Quality Assurance	28
I. United States Coast Guard, Certificate of Type Test	29
J. Canadian Standards Associated, Certificate No. 0664340000, Dated September 19, 1994	30
K. Standards Association of Australia, Certificate No. Ex973, Dated November 1, 1989	31
L. ABS Certificate of Design Assessment (02-HS306701-PDA)	32-33
M. Det Norske Veritas Type Approval Certificate (Certificate No. A-8408)	34-37
N. Sira (QAN) Quality Assurance Notice, No. Sira 03 ATEX M251	38-39
O. Glossary of Approvals	40
P. Temperature Conversion Chart	41
Q. Guideline for Tape Repair	42-43
R. List of Corrosive Chemicals	44
S. List of Drawings	45

WARRANTY

MMC SONIC ULLAGE, INTERFACE, TEMPERATURE & TRIPLE FUNCTION TAPES:

The seller, MMC or its licensed agents, fully warrants equipment of it manufacture against defects in materials or workmanship for a period of one year from the date of shipment. No other warranty period, in excess of one year, may be expressed or implied by sub-agents or others, unless authorized in writing by MMC. The liability of the seller under this warranty is limited, at seller's option, solely to repair or replace with equivalent equipment.

The seller, upon the expiration of the warranty period, has the option to apply a limited credit, not to exceed the original equipment sales price, toward the purchase of a new piece of equipment, if returned equipment is beyond reasonable repair. In any event, non-warranty repair charges will be quoted to buyer, for authorization, before repair work commences.

In the Event of Returns for Warranty Repairs:

A. The buyer is to notify the seller in writing upon discovery of the defects.

B. Upon receipt of written authorization from the seller, the equipment is to be returned as directed, transportation prepaid by the buyer.

C. Buyer is to disclose the use of this product within hazardous chemical substances. It is the responsibility of the buyer to clean or decontaminate this product before returning for repairs. Buyer's refusal will void repair warranty at seller's option.

D. If seller's examination of such equipment disclosed to his satisfaction that defects were not caused by negligence, misuse, improper installation, accident or unauthorized repair or alteration by the buyer, repairs will be immediately affected.

E. Buyer is to provide shipping instructions for the return, including mode of transportation.

This warranty does not include mechanical parts failure due to wear or corrosion from normal usage, nor does it cover limited life electrical components, or elastomer seals.

This warranty is in lieu of all other warranties, expressed or implied, including that implied of fitness for a particular purpose to the original purchaser or to any other person. Seller shall not be liable for consequential damages of any kind.

IMPORTANT:

The equipment has been certified as intrinsically safe instrument for only those classes or categories of hazardous areas so stated on the equipment label, bearing the mark of the applicable approval agency. No other usage is implied or otherwise authorized.

Unauthorized repair or component replacement by the user, will void this warranty, and may affect the intrinsic safety of the equipment.

JANUARY 2000

http://www.ocean-automation.com
info@ocean-automation.com

1 # EC-TYPE EXAMINATION CERTIFICATE

2 **Equipment or Protective System Intended for use in Potentially Explosive Atmospheres Directive 94/9/EC**

3 EC-Type Examination Certificate Number : **BAS02ATEX1274X**

4 Equipment or Protective System: **FLEXIDIP PORTABLE GAUGING TAPE TYPE D-2401-2****

5 Manufacturer: **MMC INTERNATIONAL CORPORATION**

6 Address: **60 Inip Drive, Inwood, Long Island, New York. 11696. USA**

7 This equipment or protective system and any acceptable variation thereto is specified in the schedule to this certificate and the documents therein referred to.

8 The Electrical Equipment Certification Service, notified body number 600 in accordance with Article 9 of the Council Directive 94/9/EC of 23 March 1994, certifies that this equipment or protective system has been found to comply with the Essential Health and Safety Requirements relating to the design and construction of equipment and protective systems intended for use in potentially explosive atmospheres given in Annex II to the Directive.

The examination and test results are recorded in confidential Report N°

02(C)0176 dated 26 July 2002

9 Compliance with the Essential Health and Safety Requirements has been assured by compliance with:

EN 50014: 1997 + Amds 1 & 2 **EN 50020: 1994** **EN 50284: 1999**

except in respect of those requirements listed at item 18 of the Schedule.

10 If the sign **"X"** is placed after the certificate number, it indicates that the equipment or protective system is subject to special conditions for safe use specified in the schedule to this certificate.

11 This EC-TYPE EXAMINATION CERTIFICATE relates only to the design and construction of the specified equipment or protective system. If applicable, further requirements of this Directive apply to the manufacture and supply of this equipment or protective system.

12 The marking of the equipment or protective system shall include the following:-

Ex II 1 G **EEx ia IIB T4 (-20°C ⩽ T_a ⩽ +40°C)**

This certificate may only be reproduced in its entirety and without any change, schedule included.

File No: EECS 0685/02/013

This certificate is granted subject to the general conditions of the Electrical Equipment Certification Service. It does not necessarily indicate that the apparatus may be used in particular industries or circumstances.

HSE Health & Safety Executive

Electrical Equipment Certification Service
Health and Safety Executive
Harpur Hill, Buxton, Derbyshire, SK17 9JN, United Kingdom
Tel: +44(0)1298 28000 Fax: +44(0)1298 28244
internet: www.baseefa.com e-mail: baseefa.info.eecs@hsl.gov.uk

I M CLEARE
DIRECTOR
30 September 2002

13 Schedule

14 **EC-TYPE EXAMINATION CERTIFICATE N° BAS02ATEX1274X**

15 **Description of Equipment or Protective System**

A Flexidip Portable Gauging Tape Type D-2401-2** is designed to provide ullage, interface and temperature indications for liquids in a tank. Various models provide either all three indications, or combinations of just two out of the three.

It comprises a probe head fitted to the end of a graduated flexible tape wound on drum, so that the probe may be lowered to the required depth in the tank. The tape incorporates two conductors in addition to the graduated tape. Electronic circuits on printed circuit boards are fitted both in the probe and in the centre of the drum, and a liquid crystal display and push buttons are mounted on the drum.

A terminal for connection of an earth wire is provided on the main unit and the steel tape provides earth continuity to the probe head.

This Certificate covers various model numbers of the form D-2401-2**. The ** signifies combinations of letters which cover the exact combination of temperature, ullage, or interface options provided.

Use only battery types:-

Kodak Ultralife Lithium Type U9VL
Zinc-Carbon Type 6F22 or Zinc-Chloride Type 6F22P
Duracell/Procell Alkaline-Manganese MN1604 (6LR61)

VARIATION 0.1

To permit modifications to the sensing probe circuit and the printed circuit board assembly which has been re-designed to use surface mounted components.

16 **Report No.**

02(C)0176

17 **Special Conditions For Safe Use**

Attention is drawn to the possible hazard due to electrostatic charges which may be held by the liquid in the tank.

1. The following precaution must be taken:

   a. The apparatus must be connected to the tank earth before and during introduction into the tank.

   b. This connection must not be removed until after the apparatus has been completely withdrawn from the tank at the end of the measuring operation.

http://www.ocean-automation.com
info@ocean-automation.com

13 Schedule

14 EC-TYPE EXAMINATION CERTIFICATE N° BAS02ATEX1274X

2. It is anticipated that the user will have specific operating methods laid down to ensure safety when introducing apparatus such as this into a tank. In this case the user's operating instructions should be observed.

3. In the absence of such instructions the following should be noted:

   a) If an earthed sounding tube or pipe is provided, the probe should be entered into the tank within this tube.

   b) The advice of the appropriate legislative authority for the installation should be obtained.

18 **Essential Health and Safety Requirements**

Essential Health & Safety Requirements not covered by Standards listed at (9)		
Clause	**Subject**	**Compliance**
1.1.3	Changes in characteristics of materials and combinations thereof	Report No. 02(C)0176 Clause 6.1.1.3
1.2.2	Components for incorporation or replacement	Report No. 02(C)0176 Clause 6.1.2.2
1.2.5	Additional means of protection	Report No. 02(C)0176 Clause 6.1.2.5
1.2.7	Protection against other hazards	Report No. 02(C)0176 Clause 6.1.2.7
1.4.2	Withstanding attack by aggressive substances	Report No. 02(C)0176 Clause 6.1.4.2

19 **DRAWINGS**

Number	Issue	Date	Description
71097/878	2	9/9/02	General Assembly
71097/687	4	9/9/02	Hub & Battery Cap Sub-assy, B/D 2401/2U
71097/875	2	30/1/01	Hub & Battery Cap Sub-assy, B/D 2401 & B/D 2401/2UT
71097/559	3	11.94	Circuit Diagram, Trimode (Ullage/Interface/Temperature)
71097/689	C	3.1.95	Circuit Diagram, Ullage/Interface
71097/840	B	2.1.95	Circuit Diagram, Ullage/Temperature
71097/898	2	10/5/96	Circuit Diagram, 2MHz Probe
71097/884	2	9/9/02	Probe Assembly, Trimode and Ullage/Interface
71097/841	A	27.7.93	Probe Assembly, Ullage/Temperature
71097/583	6	4/9/02	Label Deatils, MMC

13 Schedule

14 EC-TYPE EXAMINATION CERTIFICATE N° BAS02ATEX1274X

Number	Issue	Date	Description
DRAWINGS Associated with Variation 0.1			
71097/916	2	29/8/02	Probe and PCB assembly

This certificate may only be reproduced in its entirety and without any change, schedule included.

BASEEFA List Keywords
2PROBE
2TEMPMEA

OCEAN AUTOMATION SOLUTIONS

NOT to be distributed outside the FACTORY MUTUAL SYSTEM, except by CLIENT.

ULLAGE INTERFACE TEMPERATURE PROBE

MODEL D-2401-2

FOR

HAZARDOUS LOCATIONS

from

MARINE MOISTURE CONTROL COMPANY, INC.

449 SHERIDAN BLVD.

INWOOD, L.I., NEW YORK 11696

J.I. OFOH1.AX
(3610)

SEPTEMBER 6, 1983

Factory Mutual Research

1151 Boston-Providence Turnpike
P.O. Box 688
Norwood, Massachusetts 02062

http://www.ocean-automation.com
info@ocean-automation.com

Lloyd's Register

CERTIFICATE OF TYPE APPROVAL

This is to certify that

Lloyd's Register did undertake the relevant type approval procedures of the equipment detailed below which was found to be in compliance with the essential Pollution Prevention requirements for use on ships and offshore installations classed with Lloyd's Register, and for use on ships and offshore installations when authorised by contracting governments to issue the relevant certificates, licences, permits, etc.

Manufacturer	Solartron Mobrey Limited under licence from MMC International Corp. USA	
Address	158 Edinburgh Avenue Slough Berkshire, SL1 4UE United Kingdom (UK)	MMC 60 Inip Drive Inwood Long Island New York 11096 USA
Type	**D-2401-2: D2401-2UI AND D-2401-2UT**	
Description	Portable Oil / Water Interface Detector	
Specified Standard	IMO Resolution MEPC.5 (XIII)	

The attached Design Appraisal Document forms part of this certificate.
This certificate remains valid unless cancelled or revoked, provided the conditions in the attached Design Appraisal Document are complied with and the equipment remains satisfactory in service.

Date of issue	21 May 2002	Issued by	**Lloyd's Register of Shipping, London**
Expiry date	20 May 2007		Lloyd's Register LLOYD'S REGISTER
Certificate No.	SAS P020006	Signed	London
Sheet No	1 of 2	Name	S. James Marine Support Group London

Note:

This certificate is not valid for equipment, the design or manufacture of which has been varied or modified from the specimen tested. The manufacturer should notify Lloyd's Register of any modification or changes to the equipment in order to obtain a valid Certificate.

PER (11/2000)

Lloyd's Register

CERTIFICATE OF TYPE APPROVAL

This is to certify that

Lloyd's Register did undertake the relevant type approval procedures of the equipment detailed below which was found to be in compliance with the essential Pollution Prevention requirements for use on ships and offshore installations classed with Lloyd's Register, and for use on ships and offshore installations when authorised by contracting governments to issue the relevant certificates, licences, permits, etc.

Manufacturer	Solartron Mobrey Limited under licence from MMC International Corp. USA	
Address	158 Edinburgh Avenue Slough Berkshire, SL1 4UE United Kingdom (UK)	MMC 60 Inip Drive Inwood Long Island New York 1096 USA
Type	**D 2401-2S; D-2401-2UIS AND D-2401-2UTS**	
Description	Portable Oil / Water Interface Detector	
Specified Standard	IMO Resolution MEPC.5 (XIII)	

The attached Design Appraisal Document forms part of this certificate.
This certificate remains valid unless cancelled or revoked, provided the conditions in the attached Design Appraisal Document are complied with and the equipment remains satisfactory in service.

Date of issue	21 May 02	Issued by	**Lloyd's Register of Shipping, London**
Expiry date	20 May 2007		
Certificate No.	SAS P020007	Signed	
Sheet No	1 of 2	Name	S. James Marine Support Group London

Note:

This certificate is not valid for equipment, the design or manufacture of which has been varied or modified from the specimen tested. The manufacturer should notify Lloyd's Register of any modification or changes to the equipment in order to obtain a valid Certificate.

MARINE DIVISION
17 Bis Place des Reflets - La Défense 2
92400 Courbevoie - France
Tel. 33 1 42 91 52 91
Fax 33 1 42 91 28 94

BUREAU VERITAS 1828

BUREAU VERITAS

Published on http://www.veristar.com

Certificate N°:
07373/A1 EC
File Number : ACM 141/1306/005
MED item number : **A.1/2.2**
This Certificate is not valid where presented without the full attached Schedule,composed of 10 sections.

EUROPEAN COUNCIL DIRECTIVE 96/98 EC on MARINE EQUIPMENT (M.E.D.)

EC TYPE EXAMINATION CERTIFICATE

(CERTIFICATE OF TYPE APPROVAL)

This is to certify that Bureau Veritas, acting within the scope of its notification , did undertake the relevant type approval procedures for the equipment identified below which was found to be in compliance with the International Instruments and testing standards under the requirements of Council Directive 96/98/EC, as amended.

OIL / WATER INTERFACE DETECTORS

Intrinsically safe, portable cargo multi-purpose monitoring devices and associated tank entry vapor control valves

MANUFACTURED BY:

MMC INTERNATIONAL CORP.
Inwood (NY) - UNITED STATES OF AMERICA

REGULATIONS & STANDARDS in accordance with Council Directive 96/98/EC, as amended by Commission Directive 2001/53/EC :
- MARPOL 73/78, as amended, Annex I, Regulation 15 (3)(b)
- IMO Resolution MEPC.5 (XIII)

Expiry date: 02/06/2007

Local Office : BUREAU VERITAS PORT EVERGLADES CENTRE

At Paris la Défense, on : 03/16/2004

BUREAU VERITAS SURVEYORS AT MIAMI, FL INTERNATIONAL REGISTER PARIS 1828

F. ROSAS
BVN Lead Surveyor

J.BENOIT
Marine Equipment Certification Manager
For BUREAU VERITAS, EC Notified Body N°0062

The Manufacturer is allowed to affix the MED Conformity Mark to approved equipment and issue a Declaration of Conformity, only when the production/product assessment module referred to in the Directive 96/98/EC, is fully complied with.
This Certificate remains valid until its date of expity, unless cancelled or revoked, providing the conditions in the attached Schedule are complied with and the equipment remains satisfactory in service.This Certificate does not apply to equipment which has been varied or modified from the specimen tested.
Should the specified standards be amended during the validity of this Certificate, the product(s) is/are to be re-approved prior to it/they being placed on board vessels to which the ammended standards apply.
This Certificate is issued within the scope of the General Conditions of BUREAU VERITAS Marine Division. Any Person not a party to the contract pursuant which this document is delivered may not assert a claim against BUREAU VERITAS for any liability arising out of errors or omissions which may be contained in said document, or for errors of judgment, fault or negligence committed by personnel of the Society or of its Agents in establishment or issuance of this document, and in connection with any activities for which it may provide.

Issued under the authority of the French Maritime Administration.

BV mod. Ad.E 536 August 2001

MARINE DIVISION
17 Bis Place des Reflets - La Défense 2
92400 Courbevoie - France
Tel. 33 1 42 91 53 48
Fax 33 1 42 91 28 94

BUREAU VERITAS

Certificate number

SMS.W.I.CE.D/5364/A.1

QUALITY SYSTEM APPROVAL

This is to certify that the Quality System of :

MMC INTERNATIONAL CORP.

is approved according to the European Council Directive 96/98 EC on Marine Equipment, as amended
for Module D
Production Quality Assurance

Works address :
60 Inip Drive, Inwood, NY 11096 (UNITED STATES OF AMERICA)

Item designation(s) (as detailed in the attached Schedule of Approval) **:**
OIL / WATER INTERFACE DETECTORS (A1202)

This Approval will remain valid provided that the periodical audits and inspections are carried out by Bureau Veritas as stated in the mutual Agreement.

The Approval is valid until : 05/16/2006

BUREAU VERITAS SURVEYORS AT MIAMI, FL PARIS 1828 INTERNATIONAL REGISTER

For BUREAU VERITAS
Flavio Rosas

On : 10/04/2004

This certificate is delivered within the scope of the General Conditions of BUREAU VERITAS Marine Division. Any Person not a party to the contract pursuant which this document is delivered may not assert a claim against BUREAU VERITAS for any liability arising out of errors or omissions which may be contained in said document, or for errors of judgment, fault or negligence commited by personnel of the Society or of its Agents in establishment or issuance of this document, and in connection with any activities for which it may provide.

BV Mod. Ad.E 618 - (07/04)

U.S. Department of Transportation
United States Coast Guard

Commandant
United States Coast Guard

2100 Second Street, S. W.
Washington, DC 20593-0001
Staff Symbol: G-MSE-3
Phone: (202) 267-2206
FAX: (202) 267-4816

162.055/8003/MMC

CERTIFICATION OF TYPE TEST FOR OIL/WATER INTERFACE DETECTORS FOR USE IN SLOP TANKS AND OTHER TANKS

This is to certify the equipment listed has been examined and tested in accordance with requirements of the Specification for Oil/Water Interface Detectors contained in IMO Resolution MEPC.5 (XIII). The system tested comprised the following components and this Certificate is valid only for such a system.

Type or Model: Type D-2401-2

Portable Oil/water Interface Detector

System manufacture by: (a) MMC International Corp. (See Notes). Inwood, New York, USA

To Drawings Nos. (See Notes):

A-2401-5 Rev. C, A-2401-7, B-2401-13 Rev. C, B-2401-15 Rev. C, D-2401-2 Rev. E, D-2562-1FRL Rev. A.(Was D-2401-9A, See NOTES), D-2562-1FOL Rev. A (Was D-2401-9S, See notes), B2401-16 Rev B, D-2401-17 Rev. A.

A copy of this Certificate should be carried aboard a vessel fitted with this equipment at all times.

An operation and maintenance manual should be supplied with each system.

Test data and results attached as Appendix. (Available upon request).

OCEAN AUTOMATION SOLUTIONS

Agreement Number: 066434 0 000 Status: ACT

NUMBR 066434X0000 September 19, 1994(Replaces:July 28, 1987)

Class: 2258 03 PROCESS CONTROL EQUIPMENT - Intrinsically Safe and Non-incendi

Submittor: MMC International Corp.
0231213 P.O. Box 960664
Inwood, NY 11096-0664
U.S.A.

Factory 01: MMC International Corp.
0231214 50/60 Inip Drive
Long Island
Inwood, NY 11696-1096
U.S.A.

PROCESS CONTROL EQUIPMENT - Intrinsically Safe and Non-Incendive Systems - For Hazardous Locations

Class I, Groups A, B, C and D:

- Ullage interface temperature probe, Model D-2401-2, intrinsically safe, Temp Code T4; portable battery operated, 9V (Eveready 522 or Duracell MN1604 or Hercules HS22 alkaline types).

* * * * * * * * * *vb

---

http://www.ocean-automation.com
info@ocean-automation.com

STANDARDS ASSOCIATION OF AUSTRALIA

Incorporated by Royal Charter STANDARDS

HOUSE, 80 ARTHUR STREET, NORTH SYDNEY, N.S.W.

EXPLOSION PROTECTED ELECTRICAL EQUIPMENT CERTIFICATE OF COMPLIANCE

Certificate Number: Ex 973

This certificate is issued for the electrical equipment:

Ullage Interface Temperature Probe Model D-2401-2

Submitted for Certification by: MMC International Corporation
60 Inip Drive INWOOD L.I. NEW
YORK 11696 USA

and Manufactured by; MMC International Corporation

This electrical equipment and any acceptable variation thereto is specified in the Schedule or Schedules attached hereto and in the documents referred to therein.

This certifies that the equipment described has been found to comply with AS 2380.7-1987.

TYPE OF PROTECTION: Ex ia IIB T5 Zone 0

This certificate is granted subject to the conditions as set out in Standards Australia Miscellaneous Publication MP42 and any additional conditions as may be prescribed by Standards Australia.

Test Report No; FM: J.I. OP3QO.AX

File: P/3: 88121/M145

Date of Issue; 11 January 1989

Remarks; This page Is re-issued to correct an omission in the description of the equipment.

This document shall not be reproduced except in full.
This certificate remains the property of the Standards Association of Australia and must be returned to the Association in the event of it being revoked.

Director—Administration & Approvals
Standards Association of Australia

ABS

CERTIFICATE NUMBER
02-HS306701-PDA

DATE
31 July 2002

ABS TECHNICAL OFFICE
Houston-Engineering Services Department

CERTIFICATE OF Design Assessment

This is to Certify that a representative of this Bureau did, at the request of

MMC International Corp.

assess design plans and data for the below listed product. This assessment is a representation by the Bureau as to the degree of compliance the design exhibits with applicable sections of the Rules. This assessment does not waive unit certification or classification procedures required by ABS Rules for products to be installed in ABS classed vessels or facilities. This certificate, by itself, does not reflect that the product is Type Approved. The scope and limitations of this assessment are detailed on the pages attached to this certificate; and it will remain valid for five years from the date of issue or until the Rules or specifications used in the assessment are revised (whichever occurs first).

PRODUCT: **Oil / Water Interface Detectors**

MODEL: **Type 2401**

ABS RULE: **2002 SVR 4-8-3/13.3.1, 4-8-4/27.7.1**

OTHER STANDARD: **None**

AMERICAN BUREAU OF SHIPPING

P.Haendler-Eng.TA Coordinator

AB258(08/01)

NOTE: This certificate evidences compliance with one or more of the Rules, Guides, standards or other criteria of American Bureau of Shipping or a statutory, industrial or manufacturer's standard and is issued solely for the use of the Bureau, its committees, its clients or other authorized entities. Any significant changes to the aforementioned product without ABS approval will result in this certificate becoming null and void. This certificate is governed by the terms and conditions on the reverse side hereof.

TX08/01_020-PDA(0300)
US 1500

MMC International Corp.
60 Inip Drive

Inwood
New York
11096-0664
United States of America
Telephone : 516-239-7339 / 718-327-3430
Fax : 516-371-3134
Certificate No:

Product : **Oil / Water Interface Detectors**

Model Name: **Type 2401**

Intended Service:
Portable Tank gauging equipment Type 2401 is designed to provide measuring ullage, temperature and interface indications for various oil and water in Tanks.

Description:
Intrinsically safe, portable tank gauging equipment type 2401comprises a probe head fitted to the end of a graduated flexible tape wound on a drum. The tape incorporates two conductors in addition to the graduated tape. Electronic circuits on printed circuit boards are fitted both in the probe and in the center of the drum, and a liquid crystal display and push buttons are mounted on the drum.

Ratings:
EEx ia IIB T3

Service Restrictions:
Suitability of materials and temperature limits is to be confirmed to the user in each case.
The apparatus must be connected to the tank earth before and during introduction into the tank. This connection must not be removed until after the apparatus has been completely withdrawn from the tank at the end of the measuring operation.
The user will have specific operation procedures laid down to ensure safety when introducing the device into tank.
The equipment shall be identified by the manufacturer's name, serial number, type, locations, year, area classification and group.

Comments:
The manufacturer MMC international is fully responsible for informing shipbuilders and their subcontractors of the proper methods of fitting and maintenance of this product.

Term of Validity:
This product/model is covered under Product Design Assessment (PDA) Certificate # 02-HS306701-PDA, dated 02/Jul/2002. This PDA Certificate expires July of 2007. It will remain valid for the 5 years from date of issue or until the Rules or specifications used in the assessment are revised (whichever occurs first).

STANDARDS

ABS Rules:
2002 ABS Rules Cite 4-8-3/13.3.1, 4-8-4/27.7.1

International:
M.E.D, BASEEFA-Certificates Ex 95C2408X & Ex 95C2408X/1

http://www.ocean-automation.com
info@ocean-automation.com

DET NORSKE VERITAS

TYPE APPROVAL CERTIFICATE

CERTIFICATE NO. A-9248
This Certificate consists of 4 pages

This is to certify that the
Level Indicator

with type designation
Portable Tank Gauging Equipment "Flexi-dip"

Manufactured by
MMC International Corp.
Inwood, New York 11096, United States

is found to comply with
Det Norske Veritas' Rules for Classification of Ships, High Speed & Light Craft and Det Norske Veritas' Offshore Standards

Application

See page 2

Place and date
Høvik, 2004-08-09
for DET NORSKE VERITAS AS

Knut-Helge Knutsen
for *Head of Section*

Local Office
DNV New York

This Certificate is valid until
2006-06-30

Odd Magne Nesvåg
Surveyor

Notice: This Certificate is subject to terms and conditions overleaf. Any significant change in design or construction may render this Certificate invalid. The validity date relates to the Type Approval Certificate and not to the approval of equipment/systems installed.

If any person suffers loss or damage which is proved to have been caused by any negligent act or omission of Det Norske Veritas, then Det Norske Veritas shall pay compensation to such person for his proved direct loss or damage. However, the compensation shall not exceed an amount equal to ten times the fee charged for the service in question, provided that the maximum compensation shall never exceed USD 2 million.In this provision "Det Norske Veritas" shall mean the Foundation Det Norske Veritas as well as all its subsidiaries, directors, officers, employees, agents and any other acting on behalf of Det Norske Veritas.

Cert. No.: A-9248
File No.: 893.30

Product description

Portable electronic tank gauging equipment "Flexi-dip" (trademark), and associated tank entry vapour control valves, consisting of:

1. Portable tank gauging equipment : (Intrinsically safe)

Sensor type :	Model number :	Monitoring function :
Tri-mode Stainless and plastic sensor version	D-2401-2	Ullage, Temperature, Oil/Water Interface
Oil/Water Interface Stainless and plastic sensor version	D-2401-2UI	Ullage, Oil/Water Interface
Bi-mode	D-2401-2UT	Ullage, Temperature
Temperature	D-2272-1B	Temperature
Oxygen	D-2615-11	0-25% Oxygen

2. Vapor control valves :

Valve type :	Model number :	Monitoring function :
"A"	D-2291-1A	4" A.N.S.I., 150#
"B"	B-2318-23 (XXX)	2" A.N.S.I., 150#
"MB"	B-2318-24 (XXX)	2" A.N.S.I., 150#
"MMB"	B-2318-18 (XXX)	1-1/2" A.N.S.I., 150#
"S"	D-2314-1S	4" A.N.S.I., 150#

Note : (XXX) denotes material variation in valve trim (seals, valve cap).

Application/Limitation

Portable electronic equipment, not for permanent installation.

Type Approval documentation

Intrinsically safe gauging devices:

Model no,	Drawing No	Description	IBC Gauging class (*)	Dated	Ex-ia class
D-2401-2	DB-2562-1FRL Rev.B	Ullage, Temperature, Interface (UTI)	Restricted or open	87-10	IIB T3
D-2401-2	S-2562-1TR	Gas tight version of UTI	Closed	91-10	IIB T3
D-2401-2UI	DB-2562-1FRI Rev.A	Ullage, Interface (UI)	Restricted or open	87-10	IIB T3
D-2401-2UI	S-2562-1UI	Gas tight version of UI	Closed	91-10	IIB T3
D-2401-2	S-2562-1UT	Ullage, Temperature Gas tight version	Closed	95-05	IIB T3
D-2272-1B	DB-2562-1FRN Rev.A	Temperature only	Restricted or open	87-10	IIB T3
D-2615-11	DB-2615-1FRX	Oxygen, 0-25%	Restricted or open	92-10	IIB T4

Cert. No.: A-9248
File No.: 893.30

Vapour control valves for use with above gauging devices:

Model no,	Drawing No	Description	IBC Gauging class (1)	Dated	Ex-i class
B-2318-24	B-2318-24 SBC	2" 150# Flanged MMC Type "MMB" vapour valve with bronze end cap	Restricted or closed	96-03	(2) (3)
B-2318-23	B-2318-23 SBC	2" 150# Flanged MMC Type "B" vapour valve with bronze end cap	Restricted or closed	96-03	(2) (3)
B-2318-18	B-2318-18 SBC	1.5" 150# Flanged MMC Type "MB" vapour valve with bronze end cap	Restricted or closed	96-03	(2) (3)

Notes:
(1) IBC gauging class definition for chemical carriers. I.S. class ullage to be confirmed.
(2) Valve ballport is electro-statically grounded.
Ship's hull ground to vapour valve to be confirmed upon all valve installations.

Typical installation drawings. Gauging device with vapour control valves:

Gauging device model no,	Drawing No	Manufacturer's installation guidance	Dated
D-2401-2, D-2401-2UI D-2401-2UT, D-2272-1B	S-2300-1 Rev.C	Typical installation criteria for hand gauging tapes and vapour control valve type "S", "B", "MB", and "MMB"	96-03
D-2401-2, D-2401-2UI, D-2401-2UT, D-2272-1B	S-2300-2	Typical installation criteria for hand gauging tapes and vapour control valve type "A" and "U"	96-03
D-2401-2, D-2401-2UI D-2401-2UT, D-2272-1B	S-2300-3	Typical installation criteria for hand gauging tapes and vapour control valve type "MB"	96-03
D-2401-2, D-2401-2UI D-2401-2UT, D-2272-1B	S-2300-4	Typical installation criteria for hand gauging tapes and vapour control valve type "B"	96-03
D-2314-1S	S-2314-1SV5	Typical installation criteria for use with hand gauging tapes	96-03

BASEEFA certificate Ex 95C2408X dated 99-10-14 for intrinsic safety Ex-ia IIB T3.
Test report KDG Mobrey no.3961 dated 96-10-30 acc. to IMO Res. MEPC.5(XIII).
Test report KDG Mobrey no.3984 dated 97-05-06 acc. to IMO Res. MEPC.5(XIII).

Tests carried out

Environmental tests according to C.N. 2.4 not carried out, as equipment is portable and shall not be left permanently installed.

Cert. No.: A-10080
File No.: 893.30

Typical installation drawings. Gauging device with vapour control valves:

Gauging device model no.	Drawing No	Manufacturer's installation guidance	Dated
D-2401-2, D-2401-2UI D-2401-2UT, D-2272-1B	S-2300-1 Rev.C	Typical installation criteria for hand gauging tapes and vapour control valve type "S", "B", "MB", and "MMB"	96-07
D-2401-2, D-2401-2UI, D-2401-2UT, D-2272-1B	S-2300-2	Typical installation criteria for hand gauging tapes and vapour control valve type "A" and "U"	90-08
D-2401-2, D-2401-2UI D-2401-2UT, D-2272-1B	S-2300-3	Typical installation criteria for hand gauging tapes and vapour control valve type "MB"	95-06
D-2401-2, D-2401-2UI D-2401-2UT, D-2272-1B	S-2300-4	Typical installation criteria for hand gauging tapes and vapour control valve type "B"	97-10
D-2314-1S	S-2314-1SV5	Typical installation criteria for use with hand gauging tapes	96-07

Test report KDG Mobrey no.3961 dated 96-10-30 acc. to IMO Res. MEPC.5(XIII).
Test report KDG Mobrey no.3984 dated 97-05-06 acc. to IMO Res. MEPC.5(XIII).

Tests carried out

Environmental tests according to C.N. 2.4 not carried out, as equipment is portable and shall not be left permanently installed.

Certificate retention survey

The scope of the retention/renewal survey is to verify that the conditions stipulated for the type are complied with, and that no alterations are made to the product design or choice of systems, software versions, components and/or materials.

The main elements of the survey are:

- Ensure that type approved documentation is available.
- Inspection of factory samples, selected at random from the production line (where practicable)
- Review of production and inspection routines, including test records from product sample tests and control routines.
- Ensuring that systems, software versions, components and/or materials used comply with type approved documents and/or referenced system, software, component and material specifications.
- Review of possible changes in design of systems, software versions, components, materials and/or performance, and make sure that such changes do not affect the type approval given.
- Ensuring traceability between manufacturer's product type marking and the type approval certificate.

Survey to be performed at renewal of this certificate.

END OF CERTIFICATE

sira
Certification Service

QUALITY ASSURANCE NOTIFICATION

SCHEDULE

Explosion protection concepts for which the manufacturer has been assessed

ia, ib Intrinsic Safety

Equipment categories for which the manufacturer has been assessed

Instrumentation, Measurement and Control Equipment
Sensors and Transducers
Communications and Telemetry Equipment (including Alarms, Sounders and Speakers)

Certificates included within the scope of this Notification

BAS 02ATEX1274X

Notification No: SIRA 03 ATEX M251
Date of Initial Issue: 16 April 2003
Date of Current Issue: 19 May 2006
Page 2 of 2

Sira Certification Service
Rake Lane · Eccleston · Chester CH4 9JN · UK

This document remains the property of Sira and shall be returned when requested by the Company.

sira
Certification Service

1 **QUALITY ASSURANCE NOTIFICATION**

2 **Equipment and protective systems intended for use in potentially explosive atmospheres Directive 94/9/EC**

3 Notification No. SIRA 03 ATEX M251

4 Equipment, protective system or components as listed in the schedule attached to this notification.

5 Applicant **MMC International Corporation**
60 Inip Drive
Inwood
New York 11096
USA

6 Manufacturer As above

7 Sira Certification Service being a Notified Body No. 0518 for Annexes IV and VII in accordance with Article 9 of Directive 94/9/EC of the European Parliament and the Council of 23 March 1994, notifies to the applicant that the manufacturer has a quality system which complies with the requirements of Annexes IV & VII of Directive 94/9/EC.

8 This notification is based upon Sira Report No. 55A/14531 issued on 15 March 2006.

This notification can be withdrawn if the manufacturer no longer satisfies the requirements of Annexes IV & VII.

Results of periodical re-assessment of the quality system form part of this notification.

9 This notification is valid until 15 March 2007 and can be withdrawn if the manufacturer does not satisfy the quality assurance re-assessment.

10 According to Article 10 [1] of directive 94/9/EC the CE marking shall be followed by the identification number 0518 of Sira Certification Service as the notified body involved in the production control stage.

Certification Manager

Date of Initial Issue: 16 April 2003
Date of Current Issue: 19 May 2006
Page 1 of 2

Sira Certification Service
Rake Lane · Eccleston · Chester CH4 9JN · UK

This document remains the property of Sira and shall be returned when requested by the Company.

GLOSSARY OF APPROVALS

MAJOR APPROVAL STANDARDS & GOVERNMENT SPECIFICATIONS
ADOPTED BY MMC INTERNATIONAL CORP. FOR
CERTIFICATION, MANUFACTURE, INSPECTION, CALIBRATION AND TESTING

INTRINSICALLY SAFE APPROVALS

BASEEFA	British Approval Service for Electrical Equipment in Flammable Atmospheres
CSA	Canadian Standards Association
EECS	Electrical Equipment Certification Service (U.K.), (License NO. 0685)
FM	Factory Mutual Research (USA)
SAA	Standards Association of Australia

GOVERNMENT REGULATORY BODIES APPROVALS

EECS	Electrical Equipment Certification Service (U.K.)
USCG	United States Coast Guard

INDUSTRY RECOGNIZED INSPECTION BODIES APPROVALS

ABS	American Bureau of Shipping
CCS	China Classification Society
DNV	Det Norske Veritas (Norway)
LLOYD'S	Lloyd's of London (U.K.)
NKK	Nippon Kaiji Kyokai (Japan)
RINA	Registro Italiano Navale (Italy)
BV	Bureau of Veritas (M.E.D.), (Approval 07373/** EC)

GAUGING TAPE AND OTHER MEASUREMENT SPECIFICATION

FEDERAL	United States Government Specification #GGG-T-106E
NIST	National Institute of Standards & Technology Test #255610
API	American Petroleum Institute (Partial Adaptation)
ASTM	American Society for Testing Materials

PERIODIC FACTORY INSPECTIONS BY REGULATORY BODIES

FM	Factory Mutual performs quarterly inspection for both FM and SAA
EECS	Performs annual inspections for BASEEFA for equipment approval and also for ISO 9002 Standards compliance, Coupled with EECS additional requirements per their "Quality Assessment Schedule", Issue 2, 1994
CSA	CSA Performs annual inspection
OSHA	OSHA performs annual inspections (U.S. Government)
BV	Performs annual inspections
DNV	Performs annual inspections
CCS	Performs annual inspections

TEMPERATURE CONVERSION CHART

°C = 5/9 (°F-32) °F = (9/5°C)+32
Kelvin = °C +273.15 Rankine = °F +459.67

Table Example:
To Convert 1000°C to °F look up 1000 read left
To Convert 1000°F to °C look up 1000 read right

To °F	From	to °C	to °F	From	to °C	to °F	From	to °C
-0.4	-18	-27.78	165.2	74	23.33	323.6	162	72.22
+3.2	-16	-26.67	168.8	76	24.44	327.2	164	73.33
+6.8	-15	25.56	172.4	78	25.56	330.8	166	74.44
+10.4	-12	-23.33	176.0	80	26.67	334.4	168	75.56
+17.6	-8	-22.22	179.6	82	27.78	338.0	170	76.67
+21.2	-6	-21.11	183.2	84	28.89	341.6	172	77.78
+24.8	-4	-20.00	186.8	86	30.00	345.2	174	78.89
+32.0	+0	-17.78	190.4	88	31.11	348.8	176	80.00
+35.6	+2	-16.67	194.0	90	32.22	352.4	178	81.11
+39.2	+4	-15.56	197.6	92	33.33	356.0	180	82.22
+42.8	+6	-14.44	201.2	94	34.44	359.6	182	83.33
+46.4	+8	-13.33	204.8	96	35.56	363.2	184	84.44
+50.0	+10	-12.22	208.4	98	36.67	366.8	186	85.56
+53.6	+12	-11.11	212.0	100	37.78	370.4	188	86.67
+57.2	+14	-10.00	215.6	102	38.89	374.0	190	87.78
+60.8	+16	-8.89	219.2	104	40.00	377.6	192	88.89
+64.4	+18	-7.78	222.8	106	41.11	381.2	194	90.00
+68.0	+20	-6.67	226.4	108	42.22	384.8	196	91.11
+71.6	+22	-5.56	230.0	110	43.33	388.4	198	92.22
+75.2	+24	-4.44	233.6	112	44.44	392.0	200	93.33
+78.8	+26	-3.33	237.2	114	45.56	395.6	202	94.44
+82.4	+28	-2.22	240.8	116	46.67	399.2	204	95.56
+86.0	+30	-1.11	244.4	118	47.78	402.8	206	96.67
+89.6	+32	0.00	248.0	120	48.89	406.4	208	97.78
+93.2	+24	+1.11	251.6	122	50.00	410.0	210	98.89
+96.8	+36	+2.22	255.2	124	51.11	413.6	212	100.00
+100.4	+38	+3.33	258.8	126	52.22	435.2	214	101.11
+104.0	+40	+4.44	262.4	128	53.33	438.8	216	102.22
107.6	42	5.56	266.0	130	54.44	442.4	218	103.33
111.2	44	6.67	269.6	132	55.56	446.0	220	104.44
114.2	46	7.78	273.2	134	56.67	449.6	222	105.56
118.4	48	8.89	276.8	136	57.78	453.2	224	106.67
122.0	50	10.00	280.4	138	58.89	456.8	226	107.78
125.6	52	11.11	284.0	140	60.00	460.4	228	108.89
129.2	54	12.22	287.6	142	61.11	464.0	230	110.00
132.8	56	13.33	291.2	144	62.22	467.6	232	111.11
136.4	58	14.44	294.8	146	63.33	471.2	234	112.22
140.0	60	15.56	298.4	148	64.44	474.8	236	113.33
143.6	62	16.67	302.0	150	65.56	478.4	238	114.44
147.2	64	17.78	305.6	152	66.67	482.0	240	115.56
150.8	66	18.89	309.2	154	67.78	485.6	242	116.67
154.4	68	20.00	312.8	156	68.89	492.8	244	117.78
158.0	70	21.11	316.4	158	70.00	496.4	246	118.89
161.6	72	22.22	320.0	160	71.11	500.0	248	120.00

http://www.ocean-automation.com
info@ocean-automation.com

GUIDELINE FOR TAPE REPAIR

The MMC sonic Trimode tape is verified as Intrinsically Safe by BASEEFA (British Approvals Service for Electrical Equipment in flammable atmospheres) in the United Kingdom.

In order to maintain the validity of the approval, tape units can be repaired only by MMC or our authorized guarantee repair offices approved by FM, BASEEFA, CSA, SAA and/or NKK. We can not offer that approval; it must be given by the approval agency.

To maintain our agreement with the above mentioned approval agencies and yet accommodate our customers as much as possible, we have developed three sets of modules, which can be purchased as units and installed by the owners of tapes. However, we must know the serial number of the tapes involved in order to maintain our records properly.

The Modules Developed are:

COMPLETE HUB ASSEMBLY, Consisting of P.C. Board with ancillary components, (without battery) faceplate, nameplate, gasket and battery connection cap (approval agency and temperature scale °C or °F to be specified by customer when ordering.

TAPE AND SENSOR ASSEMBLY, Consisting of Triple sensor, P.C. Board, screw and tape and header assembly. (Tape length and type graduation to be specified by customer when ordering).

TAPE WIPER ASSEMBLY, Consisting of wiper blades, ON/OFF Knob, mounting plate and screws.

At the present time, the following is a list of our guarantee repair offices throughout the world.

U.S.A.	**MMC INTERNATIONAL CORP.** - HEADQUARTERS 60 Inip Drive Inwood, New York 11096 Telephone: 718-327-3430 Facsimile: 516-371-3134
ENGLAND	**MMC (EUROPE) LTD.** South Nelson Road South Nelson Industrial Estate Cramlington, Northumberland NE23 9WF Telephone: 0670-738111 Facsimile: 0670-738789
USA	**HYDRAULIC * AUTOMATION CONTROLS INC** CONTROLS INC 806 W. 14th Street Long Beach CA 90813 Telephone: 562-435-3144 Facsimile: 562-435-2266
USA	**MGM MARINE, INC** 5901 Bayway Drive Baytown Texas 77520 Telephone: 281-424-3587/ 800-985-5464 Facsimile: 281-424-874
JAPAN	**MMC (ASIA) LTD.** 7-7, 2-Chome, Kotonoo-Cho Chuo-Ku, Kobe 651 Japan Telephone: 078-251-1033 Facsimile: 078-252-0265

Continued on next page

SINGAPORE	**BOND INSTRUMENTATION (S) PTE. LTD.** 8 Gul Street 3 Singapore 2262 Telephone: 65-861-4279, 861-6749 Facsimile: 65-862-4062
AUSTRALIA	**PC MAXWELL & ASSOCIATES** 15 Ocean View Avenue Red Hill South Victoria 3937 Australia Telephone: 059-89-2762 Facsimile: 059-89-2700
NETHERLANDS	**SGS NEDER LAND BV** Puntweg 4 3208 LD SIJKENISSE BLGD 31 The Netherlands Telephone: 00-31-181-693495 Facsimile: 00-31-181-693558
U.A.E	**HAVEN INSTRUMENTATION (L.L.C)** PO BOX 51793 Al Jadaf Dubai, U.A.E Telephone: 00-9714-3241535 Facsimile: 00-9714-3243585
ITALY	**SET MAR SAS** 2/A Vico Boggiano 16155 Genova Italy Telephone: 00-39-010-6989967 Facsimile: 00-39-010-6989971
RUSSIA	I.M.S 4TH Tverskay-Ymskaya ST 14-3, Apt. 41 12504447 Moscow, Russia Telephone: 00-7-095-2514305 Facsimile: 00-7-095-9733528
U.A.E	**TOTAL AUTOMATION MIDDLE EAST (L.L.C)** P.O. BOX 37256 DUBAI, U.A.E Telephone: 00-9714-3475678 Facsimile: 00-9714-3471615
FRANCE	ITS CALEB BRETT FRANCE 2, Allee Thomas Edison 13500 Martigues France Telephone: 00-39-010-6989967 Facsimile: 00-39-010-6989971

Please note, repairs carried out in any unauthorized repair facility will automatically void the guarantee. These repair procedures are in accordance with approval agencies directions for intrinsically safe devices.

For addition service centers in your area, please our website at http://www.mmcintl.com

LIST OF CHEMICALS

The following list of chemicals, although not all-inclusive, are known to attack PES, the material from which a portion of the sonic liquid level sensor is made.

Prolonged submergence of the sensor should be avoided.

After submergence in any of these chemicals, a through cleaning of the sensor head should be conducted to prolong sensor life.

* ACETALDEHYDE - CH_3CHO

* ACETONE - CH_3CHOH_3

* ANILINE - $C_6H_5NH_2$

BENZALDEHYDE - C_6H_5CL

CHLOROBENZENE - C_6H_5CL

CRESOL - $CH_3C_6H_4OH$

* CYCLOHEXANONE - $C_6H_{10}O$

DICHLOROBENZENE - $C_6H_4CL_2$

1,2 DICHLORETHANE - CH_2CLCH_2CL

* ETHYL ACETATE - $CH_3COOC_2H_5$

* ETHYLENE GLYCOL - HOC_3H_4OH

* METHYL ETHYL KETONE - $C_2H_5COCH_3$

* METHYLENE CHLORIDE - CH_2CL_2

NITRO BENZENE - $C_6H_5NO_2$

* PHENOL - C_6H_5OH

* PYRDINE - C_5H_5N

TOLUENE - $C_6H_5CH_2$

TRICLOROETHYLENE - $CLCH{:}CCL_2$

*These chemicals are known to be water soluble, ranging from very to slightly soluble. While this information is, it will also make interface readings less accurate. In such case, good interface readings will depend upon the relative specific gravity's involved. In the extreme case of dissolved water within a cargo, and upon ullage gauging of these chemicals, a beeping tone will be heard instead of the normal steady horn tone. This sensor response should not be interpreted as a malfunctioning unit.

LIST OF DRAWINGS

"RESTRICTED TAPE"

DRAWING NUMBER	REV.	DESCRIPTION
B-2401-31	A	P. C. Board Component Placement & LCD Assembly
B-2401-72B	A	Sub-Assembly, Hub Coverplate and P. C. Board) Factory Mutual & BASEEFA
D-2562-1FRL	B	Restricted Trimode Tape Assembly for use with Vapor Control Valve
S-2300-1	D	Typical Installation Criteria for Zero Ullaging, MMC Vapor Control Valves

OCEAN AUTOMATION SOLUTIONS

UNAUTHORIZED USE, MANUFACTURE OR REPRODUCTION IN WHOLE OR IN PART IS PROHIBITED
DRAWING, DESIGN AND OTHER DISCLOSURES PROPERTY OF
MMC INTERNATIONAL CORP.
INWOOD L.I. NEW YORK

REVISIONS

SYM.	DESCRIPTION	DATE	APP'D
A	CONVERTED TO CAD FORMAT L1 & L2 MOVED TO PCB TOP SIDE, PT#9 (LED REFLECTOR) DELETED	7-99	FSG

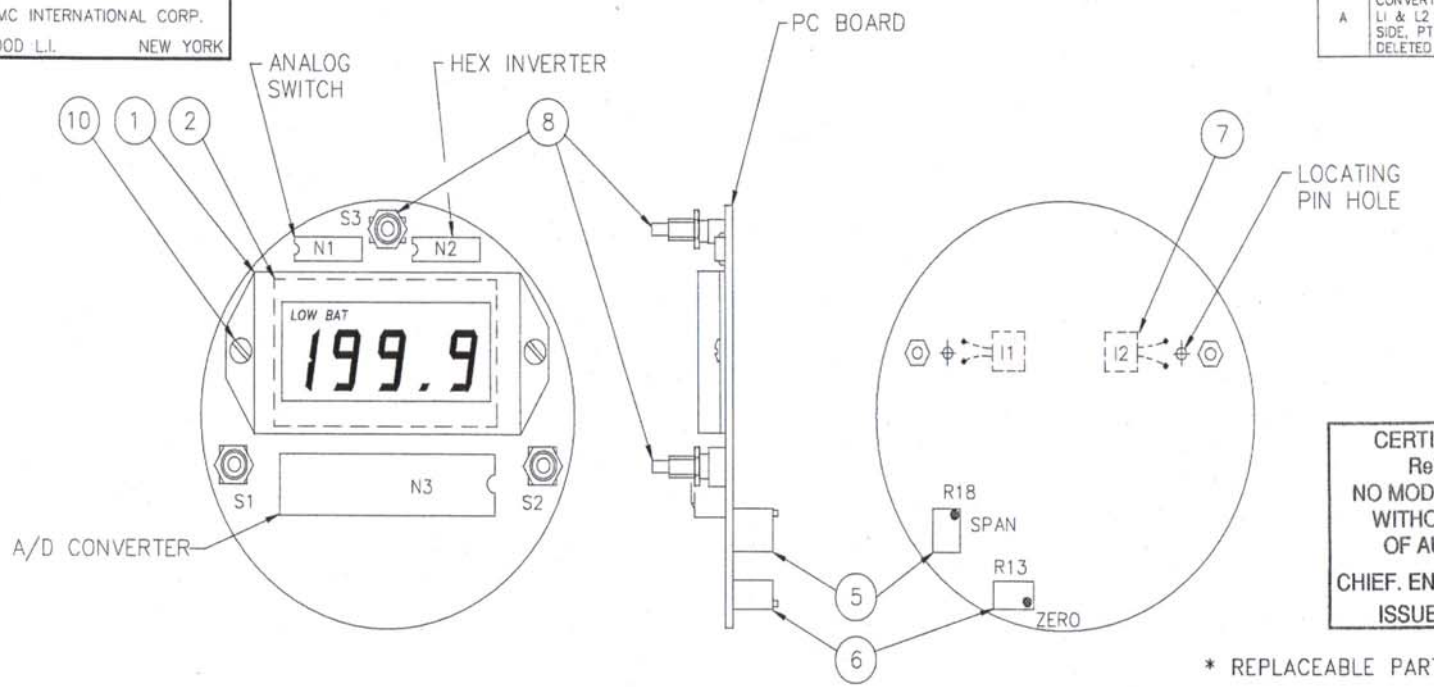

CERTIFIED PRODUCT DWG.
Related/Approval Type
NO MODIFICATIONS PERMITTED
WITHOUT PRIOR APPROVAL
OF AUTHORIZED PERSON
CHIEF. ENG. .....
ISSUE DATE 10/99

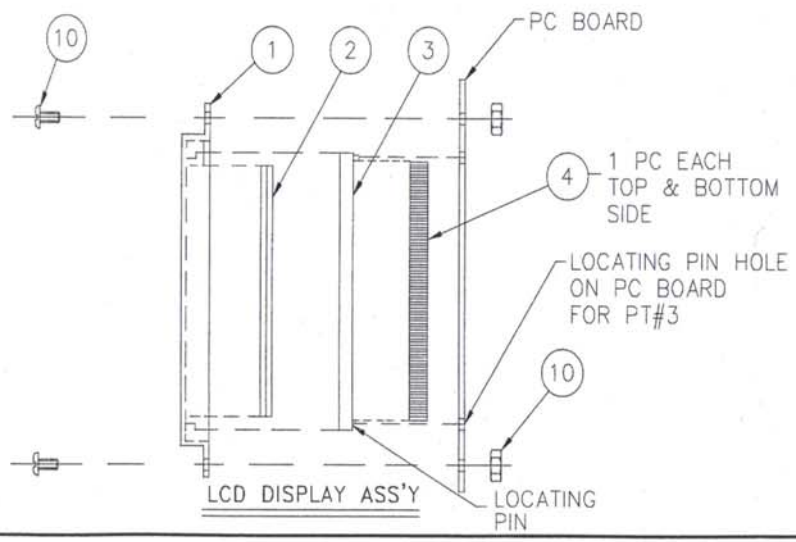

* REPLACEABLE PARTS

	SYM	REQD	PART NO.	REF	DESCRIPTION	MAT'L
*		2ea	10	16-2401-2	SCREW,PAN HD #2-56 X 9/32LG, HEX NUT #2-56	STN. STL
			9			
	S1, S2 S3	3	8	5-2401-32	SWITCH, PUSHBUTTON, N.O. SUBMINIATURE	1/4-40 THD
	I1, I2	2	7	5-2402-8	LED, WHITE FLAT	PLASTIC
	R13	1	6	5-2401-31	POTENTIOMETER, 100K (ZERO)	CERMET
	R18	1	5		POTENTIOMETER, 100K (SPAN)	CERMET
*		2	4	16-2401-3	ZEBRA CONNECTOR STRIP, 20 CONTACTS	CONDUCTIVE ELASTOMER
*		1	3		RETAINER, ZEBRA CONNECTOR	PLASTIC
*		2	2	5-2401-9	LCD DISPLAY, 3 1/2 DIGITS, DUAL IN-LINE	GLASS
*		1	1	7-2272-3	LCD DISPLAY HOLDER	PLASTIC

DIMENSIONAL TOLERANCES UNLESS OTHERWISE SPECIFIED

FRAC.	DEC.	ANG.
± 1/64	± .005	± 30'

SCALE FULL | NO. REQ'D.
NEXT ASSY. D-2401-16 & D-2401-17

TRIMODE PC BOARD
COMPONENT PLACEMENT
& L.C.D. ASSEMBLY

MMC INTERNATIONAL CORP.
INWOOD L.I. NEW YORK

DRAWN P.E. DATE 3/12/84
CHECKED DATE
APPROVED DATE

DWG. NO. B-2401-31
REV. A

http://www.ocean-automation.com
info@ocean-automation.com

UNAUTHORIZED USE, MANUFACTURE OR REPRODUCTION IN WHOLE OR IN PART IS PROHIBITED
DRAWING, DESIGN AND OTHER DISCLOSURES PROPERTY OF
MMC INTERNATIONAL CORP.
INWOOD L.I. NEW YORK

OCEAN AUTOMATION SOLUTIONS

REVISIONS			
SYM.	DESCRIPTION	DATE	APP'D
A	ORIGINAL SCANNED & COVERTED TO CAD FORMAT	1/99	FSG

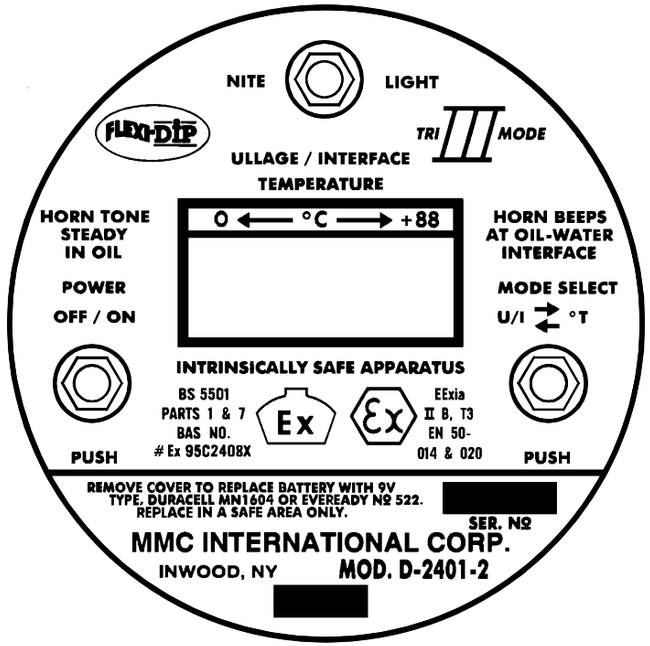

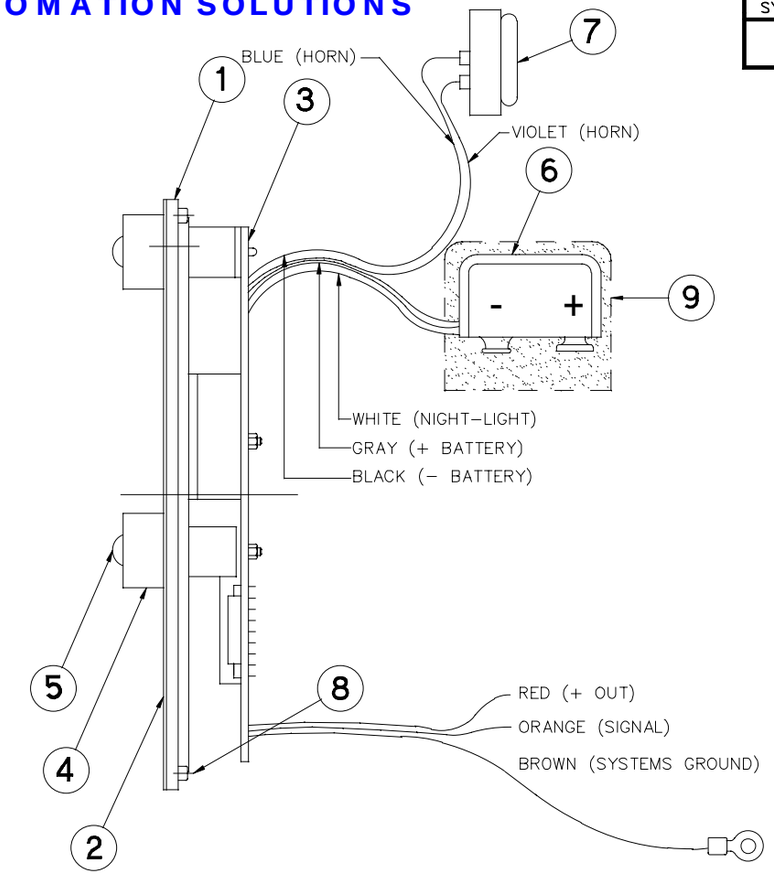

BASEEFA APPROVAL LABEL

PART NO.2

QTY.	PT.#	DWG. NO.	DESCRIPTION	MAT'L.
1	9		BATTERY BOOT	VINYL
1	8	———	"O"- RING, PARKER # S-155	BUNA-N
1	7	A-2401-63	HORN, PIEZO ELEC. SUB-ASS'Y.	EFBRD24C41
1	6	B-2401-15	BATTERY, CONNECTION CAP	POTTED
3	5	AMR N5040R	PUSH BUTTON SEAL CAP	BUNA-N
3	4	A-2272-17	PUSH BUTTON GUARD	ALUM
1	3	D-2401-16	HUB, PC BOARD, TRIPLE	1/16, FR4
1	2	AS SHOWN	NAME PLATE, HUB TRIPLE HAND TAPE	B2401-11A
1	1	A-2455-13	HUB, FACEPLATE	LEXAN

DIMENSIONAL TOLERANCES UNLESS OTHERWISE SPECIFIED		
FRAC	DEC	ANG.
= 1/64	± .005	± 30'

SCALE FULL | NO REQ'D —
NEXT ASSY

TITLE SUB-ASSY HUB COVERPLATE & PCB (TRIPLE FUNCTION)

DRAWN L. CORRADO DATE 11/87
CHECKED DATE
APPROVED F.S.GIANNONE DATE

MMC INTERNATIONAL CORP.
INWOOD L.I. NEW YORK

DWG NO. B-2401-72B
REV. A

http://www.ocean-automation.com
info@ocean-automation.com

UNAUTHORIZED USE, MANUFACTURE, OR REPRODUCTION IN WHOLE OR IN PART IS PROHIBITED
DRAWING, DESIGN, AND OTHER DISCLOSURES PROPERTY OF
MMC INTERNATIONAL CORP.
INWOOD, L.I. NEW YORK

OCEAN AUTOMATION SOLUTIONS

REVISIONS				
SYM.	DESCRIPTION	DATE	BY	APP'D.
B	REDRAWN AND UPDATED TO CAD VERSION 3-02	9/97	F.S.G	

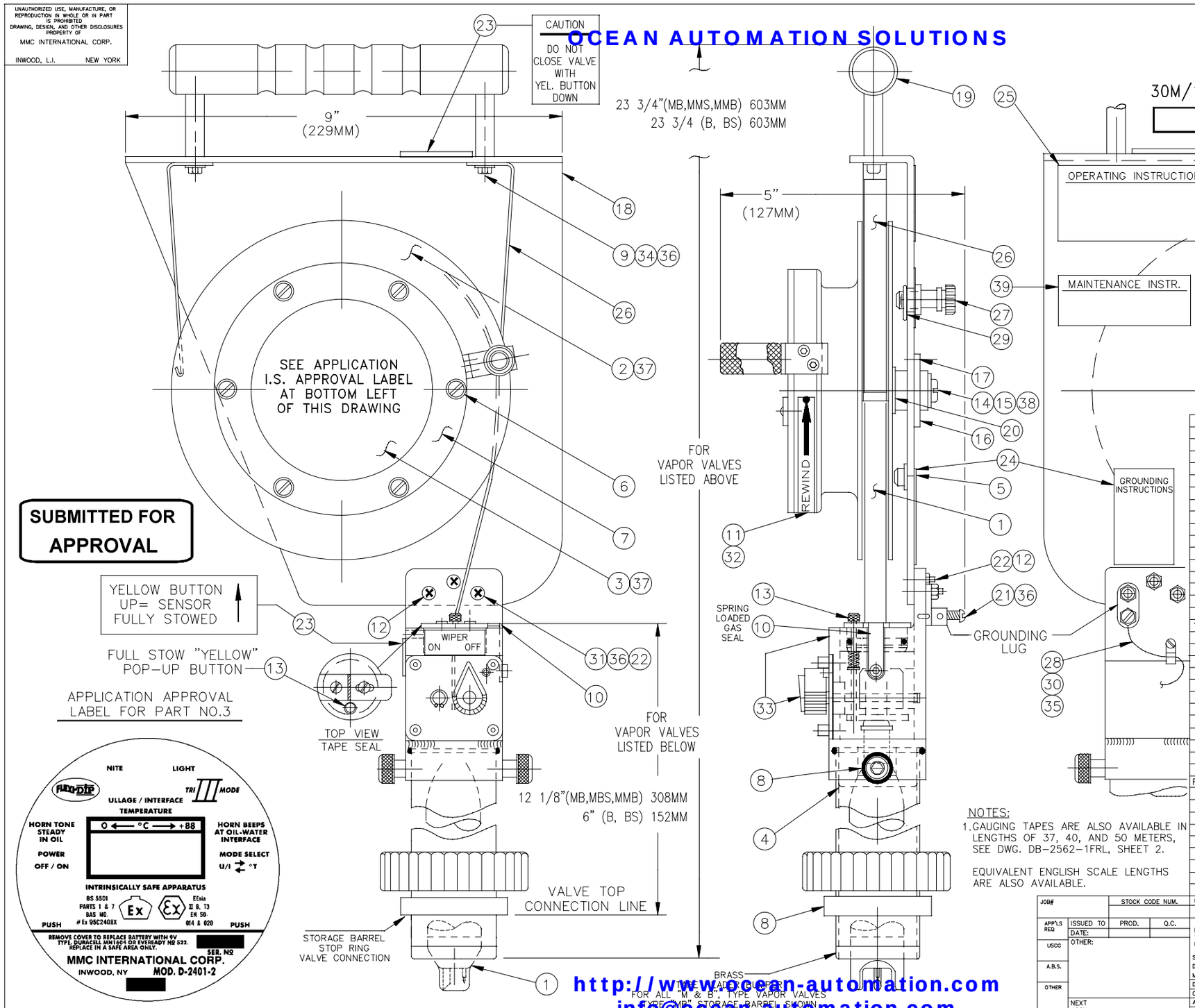

NOTES:
1. GAUGING TAPES ARE ALSO AVAILABLE IN LENGTHS OF 37, 40, AND 50 METERS, SEE DWG. DB-2562-1FRL, SHEET 2.

EQUIVALENT ENGLISH SCALE LENGTHS ARE ALSO AVAILABLE.

REQ'D.	PART NO.	DESCRIPTION	MAT'L.	REF. DWG
1	40	NAMEPLATE, REEL LOCK	MYLAR	A-2562-57
1	39	NAMEPLATE, MAINTENANCE INSTRUCTIONS	AL. FOIL	A-2272-9
1	38	RETAINING WASHER, DRUM SHAFT	BRASS	B-2562-67
1	37	BATTERY,9V, MN1604 OR PER I.S. APPROVAL LABEL	ALKALINE	
5	36	WASHER, FLAT, NO. 8	STN.STL.	
1	35	SCREW, TRUSS HD., 6-32NC x 3/8 LG.		
1	34	WASHER, SPLIT, LOCK NO.8	STN.STL.	
1	33	TAPE WIPER HOUSING TO STORAGE BARREL ASS'Y		B2562-50R
2	32	SCREW,DRIVE, NO.4 x 1/4 LG.	STN.STL.	
1	31	SCREW,FLT. HD 8-32NC x 7/8 LG	STN.STL.	
1	30	CABLE CLAMP, STRAIN RELIEF	NYLON	
1	29	RING, RETAINING, WALDES NO.5133-25	STN.STL.	A-2562-27
1	28	GROUNDING CABLE, COILED WITH GRD CLAMP		B-2562-72
1	27	THUMBSCREW, LOCK ASS'Y, PLASTIC TIPPED	BRASS	A-2562-27
2	26	SPRING BAND, TAPE RETAINER	STN.STL.	A-2562-28
1	25	NAMEPLATE, OPERATING INSTRUCTIONS	AL. FOIL	
1	24	NAMEPLATE, GROUNDING INSTRUTIONS	AL. FOIL	A-2272-9
1ea	23	NAMEPLATE, CAUTION & STOW, AS SHOWN	AL. FOIL	A-2562-74
3	22	NUT, LOCK, ELASTIC 8-32NC	STN.STL.	
1	21	GROUNDING LUG & SCREW	COPPER	A-2401-65
2	20	WASHER, CURVED SPRING, BERG NO. SU-12	STN.STL.	A-2562-66
1	19	HANDLE ASSY SHOWN, OR ALT. MOULDED TYPE	NYLON	B-2562-19
1	18	FRAME, SUPPORT, (SEE NOTES 4 &5)	ALUM	B-2562-34
3	17	SCREW, FIL. HD 8-32NC x 1/4 LG	STN.STL.	
1	16	BEARING, DRUM SHAFT	BRASS	B-2562-70
1	15	WASHER, FLAT #10 .750 O.D. x .049 THK.	STN.STL.	
1	14	SCREW, SOC. HD. 10-32 x 3/4 LG LONG LOCK	STN.STL.	A-2101-15
1	13	SENSOR FULL STOW INDICATOR ASS'Y	STN.STL.	B2562-50R
2	12	SCREW, FLT HD 8-32 x 3/4 LG	STN.STL.	
1	11	NAMEPLATE, REWIND DIRECTION	AL. FOIL	A-2378-1
REF	10	LEAF SPRING, EXTERNAL SLIDING SEAL	AL. FOIL	B2562-50R
2	9	SCREW, HEX. HD. 8-32NC x 1/2 LG	STN.STL.	
1	8	STORAGE BARREL ASSY. (PER VAPOR VALVE TYPE)	STN.STL.	D-2562-81
1	7	RING, HUB COVER, BLACK ANODIZED	ALUM	B-2401-48
6	6	SCREW PAN. HD 8-32NC x 1/4" LG	STN.STL.	
1	5	REEL BUTTON REST	NYLON	A-2562-39
1	4	GAUGING TAPE HEADER STOP	NYLON	B-2562-79
1	3	COVERPLATE,HUB, PCB & BATT'Y. CONN. ATTACHED	PLASTIC	B-2401-72
1	2	TAPE REEL ASSY, WITH BRASS TURNING KNOB	ALUM	D-2401-10
1	1	UTI SENSOR ASS'Y, W/ANTI-STATIC GAUGING TAPE,	B-2401-13A	

LIST OF MATERIAL

JOB#	STOCK CODE NUM.
APP'LS REQ	ISSUED TO / DATE: / PROD. / Q.C.
USCG	OTHER:
A.B.S.	
OTHER	
	NEXT ASSY:

UNLESS OTHERWISE SPECIFIED DIMENSIONS ARE IN INCHES
TOLERANCES ON
FRACTIONS ±1/64 DECIMALS ±.005 ANGLES ±30'
SURFACE FINISH 250
DE-BURR ALL EDGES
METRIC IN BRACKETS

		DATE:
DRAWN:	L. CORRADO	10-87
C'KD.:		
APP'D.:	F.S.GIANNONE	10-87
APP'D.:	F.S.GIANNONE	7-96

"FLEXIDIP"

PORTABLE TAPE ASS'Y

ULLAGE INTERFACE TEMPERATURE
RESTRICTED GAUGING
LGT'S 15-30 METER, 25-100 FT
INTRINSICALLY SAFE DEVICE

SCALE: 1:1 WT. MAX.

UNAUTHORIZED USE, MANUFACTURE, OR REPRODUCTION IN WHOLE OR IN PART IS PROHIBITED
DRAWING, DESIGN, AND OTHER DISCLOSURES PROPERTY OF
MMC INTERNATIONAL CORP.
INWOOD, L.I. NEW YORK

DWG. NO. DB2562-IFRL REV. B

http://www.ocean-automation.com
info@ocean-automation.com

UNAUTHORIZED USE, MANUFACTURE OR REPRODUCTION IN WHOLE OR IN PART IS PROHIBITED.

OCEAN AUTOMATION SOLUTIONS

TYPICAL INSTALLATION CRITERIA FOR ZERO ULLAGING MMC VAPOR CONTROL VALVES & HAND GAUGING TAPES USED FOR ULLAGE, INTERFACE & TEMPERATURE CARGO MEASUREMENTS FOR RESTRICTED GAUGING APPLICATIONS

(CLASS OF APPLICATION DEPENDENT UPON GOVERNING AGENCY RULES)

REVISIONS			
SYM	DESCRIPTION	DATE	APP D
C	REDRAWN AND UPDATED	7/96	
D	UPDATED FOR RES. ONLY APPL.	02/02	

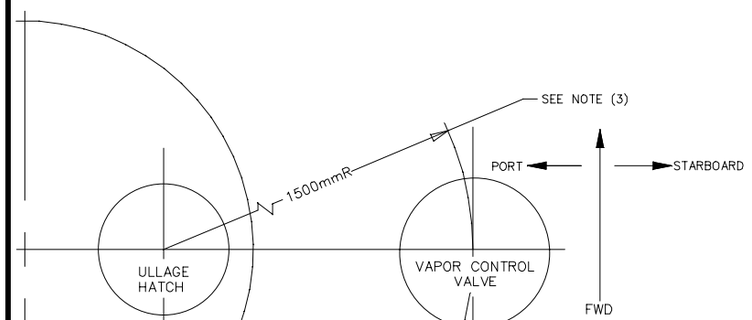

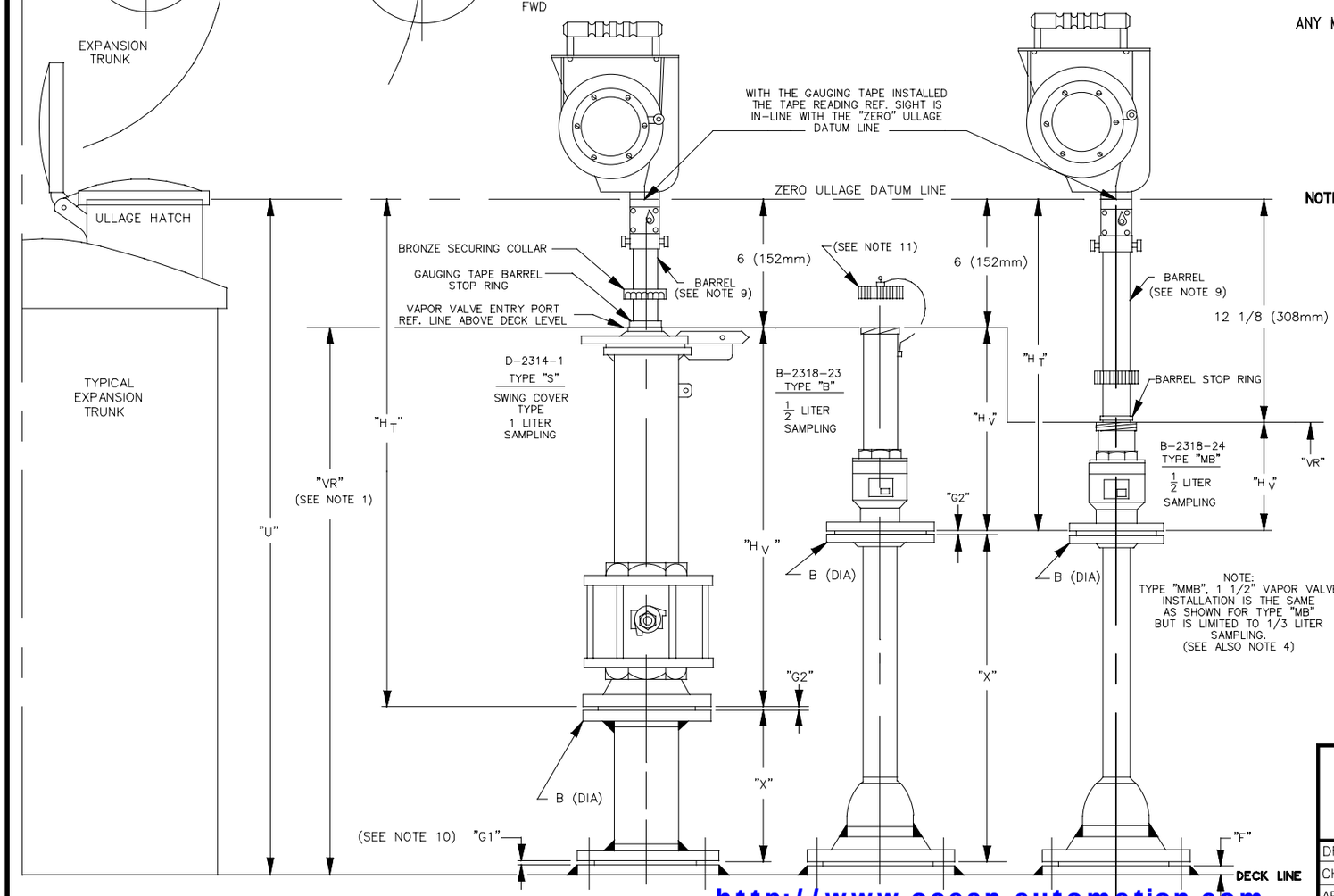

ZERO ULLAGE CALCULATIONS & DIMENSIONS FOR VCV'S

VALVE TYPE	REF. DWG NO.	"H"$_V$	"H"$_T$	"B" FLANGE	"U"	"X"
"S"	D-2314-1	26 1/2" (673mm)	32 1/2" (826mm)	4"-150"ASA	MEASURED ON BOARD OR AS DECIDED BY OWNER/ SHIP BUILDERS DRAWING PLAN.	X=U-(HT+F+G1+G2)
"B"	B-2318-23	13 1/8" (333mm)	19 1/8" (486mm)	■ 2"-150"ASA		"
"MB"	B-2318-24	7" (178mm)	19 1/8" (486mm)	■ 2"-150"ASA		"
"MMB"	B-2318-18	7" (178mm)	19 1/8" (486mm)	1 1/2"-150"ASA	NOT SHOWN, USED FOR TANK DRYNESS CHECKING	NOT APPLICABLE SEE NOTE 4

■ ALSO MATES WITH 50mm-10 KG

ANY MMC VAPOR VALVE CAN BE USED WITH GAUGING TAPE MODELS LISTED BELOW:

D-2401-2, TRIMODE (PT.# 2401TR- - - -*)
D-2401-2UI, ULLAGE/INTERFACE (PT.# 24012R- - - -*)
D-2401-2UT, ULLAGE/TEMP. (PT.# 2401BR- - - -*)
D-2272-1, TEMPERATURE (PT.# 2272-R- - - -*)
D-2562-1FS, SAMPLING (PT.# 2326R2562- *)

*AVAILABLE IN LENGTHS OF 50', 75', 100', 120', 165', 15M, 25M, 30M, 37M, & 50M

1 LITER, 1/2 LITER AND 1/3 LITER, ALL STAINLESS STEEL SAMPLERS .
PT.#1LTR-3.5x10LG, PT#1LTR-2.5x16LG, PT.# 1/2LTR-1.625X18, PT# 1/3LTR-1.375X18.

NOTES:

1. ALL VALVES TO BE INSTALLED PLUMB. "VR" ERRORS DUE TO DECK CAMBER, MUST BE CONSIDERED AND CAN BE ADJUSTED FOR IN THE CONSTRUCTION OF THE "F" PLATE.
2. RATING OF MATING FLANGES TO BE AS SHOWN IN THE ABOVE TABLE UNDER COLUMN HEADING, "B" FLANGES.
3. WHEN ZERO ULLAGING VAPOR CONTROL VALVES, THEY SHOULD BE INSTALLED ON OR WITHIN A 1.5 METER RADIUS FROM THE CENTER OF THE ULLAGE HATCH. TO ELIMINATE THE NEED FOR TRIM CORRECTION TO EXISTING SHIP'S ULLAGE TABLES, THEY SHOULD IF POSSIBLE, BE INSTALLED ON A LINE THAT PASSES THROUGH THE ULLAGE HATCH CENTER, IN A PORT TO STARBOARD DIRECTION.
4. VAPOR CONTROL VALVES USED ONLY TO MEASURE INNAGE SOUNDINGS OR TANK DRYNESS, NEED NOT BE INSTALLED TO ZERO ULLAGE REFERENCE.
5. TYPICAL DECK PENETRATION SHOWN IS FOR ILLUSTRATION SIMPLICITY, OTHER METHODS THAT MAY BE CONSIDERED ARE VIA C-L COVERS OR VIA CONVENTIONAL BUTTERWORTH PLATES, ETC.
6. ANY METHOD CHOSEN FOR DECK PENETRATION FOR U.S.A. FLAG VESSELS, MUST BE IN ACCORDANCE WITH APPLICABLE U.S.C.G. REGULATIONS.
7. FOR FOREIGN FLAG VESSELS, THE REGULATIONS OF CLASSIFYING OR OTHER GOVERNING BODIES SHOULD BE CONSULTED.
8. FOR CLARITY, ALL VALVE HARDWARE IS REMOVED FROM ILLUSTRATIONS
9. BARRELS ARE REPLACEABLE, AND CAN BE INTERCHANGED WITH EACH OTHER. TO RE-ORDER BARRELS, SPECIFY VAPOR VALVE TYPE TO BE USED WITH.
10. TYPICAL "G" (GASKET) DIMENSION 3mm (1/8")
11. ALL VALVES ARE SUPPLIED WITH THREADED BARREL SEAT COVER. (BRONZE STANDARD, STAINLESS STEEL OPTIONAL).

TYPICAL INSTALLATION CRITERIA FOR ZERO ULLAGING MMC VAPOR CONTROL VALVES & HAND GAUGING TAPES FOR ULLAGE INTERFACE & TEMPERATURE CARGO MEASUREMENTS	MMC INTERNATIONAL CORP. INWOOD, L.I. NEW YORK	
DRAWN: S. BARBOUR DATE: 8/90	DWG. NO. S-2300-1	REV. D
CHECKED: DATE:		
APPROVED: F.S.GIANNONE DATE: 7/96		

http://www.ocean-automation.com
info@ocean-automation.com